Joulescope JS320 User's Guide

Jetperch LLC, revision 2.0 (2026-10-26)

CONTENTS

1 Overview **1**
- 1.1 Affordable, easy-to-use, accurate and precise . . . 1
- 1.2 Key benefits . . . 2
- 1.3 Key features . . . 2

2 Meet Your Joulescope JS320 **5**

3 Quick start **9**

4 Specifications **13**
- 4.1 Absolute maximum ratings . . . 13
- 4.2 Mechanical . . . 13
- 4.3 Recommended operating conditions . . . 14
- 4.4 Specification conditions . . . 14
- 4.5 Current measurement specifications . . . 15
- 4.6 Voltage measurement specifications . . . 15
- 4.7 General specifications . . . 16
- 4.8 Parasitic effects specifications . . . 16
- 4.9 Software-controlled fuse specifications . . . 17
- 4.10 General purpose inputs and outputs . . . 17

5 Host software **19**
- 5.1 Joulescope User Interface . . . 19
- 5.2 Scripts and automation . . . 19

6 How to Connect Your Joulescope **21**
- 6.1 Measure only current (ammeter) . . . 22
- 6.2 Measure only voltage (voltmeter) . . . 23
- 6.3 Measure power supply provided . . . 23
- 6.4 Measure target device consumption . . . 25
- 6.5 Measure subsystem consumption . . . 26
- 6.6 Measure higher voltages . . . 28

7 Theory of operation **31**
- 7.1 Ammeter . . . 31
- 7.2 Voltmeter . . . 34

7.3 Host Computer . . . 34
7.4 Power, Energy, Charge, and Statistics . . . 34
7.5 High impedance / low leakage . . . 35
7.6 Electrical isolation . . . 35

8 How to swap the front panel **37**

9 GPI & GPO **39**

10 Fuse **41**
10.1 Max Fuse . . . 41
10.2 Range Fuse . . . 42
10.3 User Fuses . . . 43

11 Electrical Isolation **45**

12 Filters and Frequency Response **47**
12.1 Analog Filter . . . 47
12.2 Downsampling . . . 48

13 Typical Behavior **49**

14 Maintenance **51**
14.1 Verification Procedure . . . 51
14.2 Offset Calibration . . . 56

15 Ordering Information **59**

16 Compliance **61**
16.1 United States . . . 61
16.2 Canada . . . 62
16.3 Europe . . . 62
16.4 Safety . . . 62
16.5 RoHS Directive 2011/65/EU, 2015/863/EU . . . 62
16.6 Country of origin . . . 62

17 Warranty **63**

18 Intellectual Property **65**

19 Change log **67**

A Glossary **69**

B Contact **71**

C Disclaimers **73**
C.1 Copyright notice . . . 73
C.2 Publisher . . . 73
C.3 Documentation warranty . . . 73

CHAPTER

ONE

OVERVIEW

1.1 Affordable, easy-to-use, accurate and precise

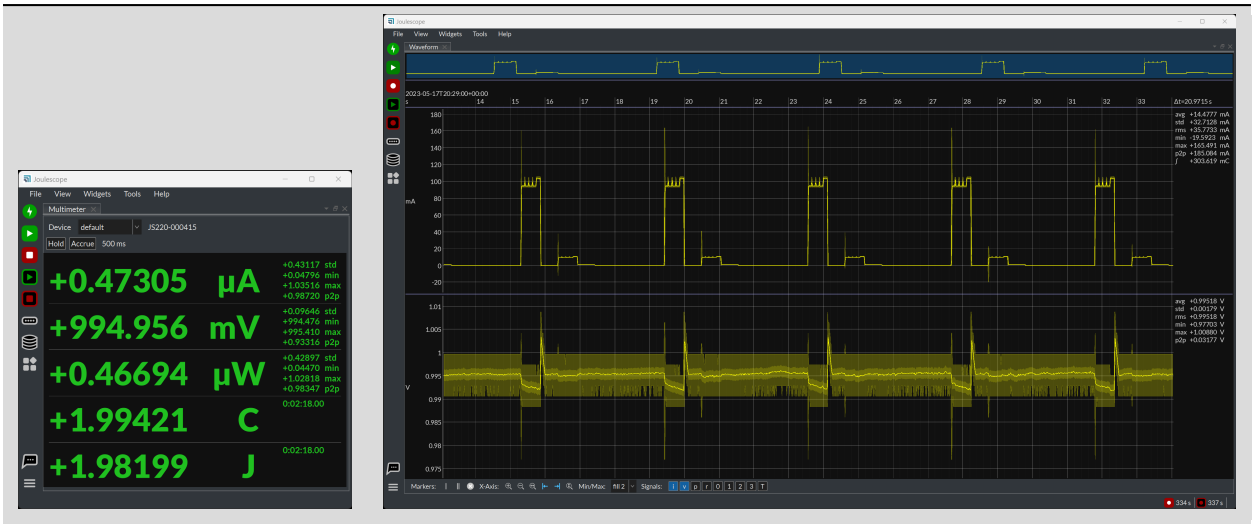

Multimeter view *Oscilloscope view*

Applications include:

- Microprocessor and microcontroller power profiling and optimization
- Hardware power optimization
- Microcontroller and device sleep current optimization
- Hardware and software troubleshooting
- Software characterization and interrupt service routine profiling
- USB inrush and suspend current pre-compliance testing
- General-purpose current, voltage, power, charge, and energy measurement

The Joulescope™ JS320 is the most affordable and easy-to-use precision DC energy analyzer. It measures current and voltage, then computes power and energy. Many modern battery-powered devices and IoT devices have a high dynamic current range, which makes accurate measurement difficult. When "sleeping" the devices consume nanoamps (nA) or microamps (µA), but when active, they consume milliamps (mA) or amps (A).

Joulescope combines high-speed sampling and rapid dynamic current range switching to provide accurate and seamless current and energy measurements, even for devices with rapidly varying current consumption. The unprecedented accuracy and low-cost of Joulescope allows every engineer on the team to measure the energy consumed by the target device during development. Joulescope provides rapid feedback on how changes affect the overall product battery life.

Joulescope displays instantaneous voltage, current, power, and energy, like a multimeter. The multimeter provides a quick and easy summary of the present state of your device.

Joulescope displays waveforms of voltage and current over time, like an oscilloscope. This oscilloscope view allows you to identify and to troubleshoot dynamic behavior and short events, including inrush current, event handlers, and tasks.

1.2 Key benefits

- **Dynamic range**: The Joulescope JS320 accurately measures electrical current over ten orders of magnitude from amps down to nanoamps. This wide range allows accurate and precise current measurements for modern devices. Sleep modes are often just nanoamps (nA) or microamps (µA). Active modes are often milliamps (mA) or amps (A).
- **Low voltage drop**: Most multimeters and current meters have a significant voltage drop (sometimes called burden voltage or insertion loss), which affects the actual voltage delivered to the device under test. Joulescope has a total voltage drop of 25 mV at 1 A, which keeps your target device running correctly. Joulescope's extremely fast current range switching maintains low voltage drop even under rapidly varying current demands.
- **Makes the invisible visible**: The JS320 measures current and voltage 2 million times per second with 200 kHz bandwidth. This high sampling rate makes the power consumption of interrupt service routines, inrush currents, and other short events visible.
- **Easy to use**: The JS320 reports cumulative energy and charge consumption along with real-time current, voltage, and power. The multimeter view clearly shows the most recent value, while the oscilloscope view allows you to explore changes over time. Much simpler and more accurate than anything in its class!
- **Customizable:** The host software is open source on GitHub. You can also swap the banana jack front panel with front panels that have other connector types. The front panels are open source on GitHub.
- **Portable:** The JS320 fits in your backpack and only needs a small part of your desk. It provides precision measurements in a portable, unintrusive form factor.
- **Affordable:** The Joulescope JS320 is affordable and priced so that every developer on the team can have one at their desk. With such convenient access, Joulescopes allow developers to see the impact of their changes on energy consumption immediately. Developers can make informed choices to account for battery life during design. Eliminate power consumption surprises during final product testing!

1.3 Key features

- ±15V voltage range
- ±3A current range, continuous
- ±10A current pulses (<10 ms, < 3A average per second)

- Down to 0.1 nA resolution, equivalent to 36-bits of dynamic range
- Synchronously measures voltage and current at 1 million samples per second, 24-bit
- 200 kHz linear phase bandwidth
- 300 kHz compensated bandwidth with optional digital filter
- Rapid 1 µs switching between shunt resistors
- Enwavify™ technology for consistent, accurate measurements through current range changes
- Computes power, energy, and charge
- Operates with minimal voltage disturbance between Current + and Current – ports
- Up to ±48V common-mode voltage between USB ground and sensing ports
- 4 general-purpose inputs and 2 general-purpose outputs
- 1 BNC trigger configurable for either digital input, digital output, or analog output
- Programmable on/off for power cycling the target device and measuring inrush currents
- USB 2.0 high-speed host connectivity with USB C connector
- Host software support for Microsoft® Windows®, Apple® macOS®, and Linux®
- Host software user interface provides real-time graphs of current, voltage, and power over time
- Python library and scripting provided
- Host software is open source and available on GitHub
- Swappable front panel with open-source designs on GitHub
- Firmware upgradable

See Section 4 for the full specifications.

CHAPTER

TWO

MEET YOUR JOULESCOPE JS320

The JS320 arrives in a carry case:

Unzip the carry case to find the JS320 instrument and accessories:

Your Joulescope JS320 purchase includes:

- Joulescope JS320 instrument with factory calibration
- Binding Post Front Panel, already installed
- 5' USB 2.0 A to C cable
- USB A to C adapter (not shown above)
- GPIO cable assembly
- 2 mm Allen wrench, for optionally swapping the front panel (not shown above)
- Quick Start Guide
- Factory calibration certificate (not shown above)
- Joulescope sticker
- Carry case

You will need to provide:

- A host computer running one of the supported platforms. Most computers manufactured within the last five years should work. The computer requires an available USB 2.0 port, at least 500 MB of hard drive / solid state drive storage space, and 1 GB of available RAM.
- Suitable cable(s) to connect the Joulescope JS320's binding posts to your system, often the power source and device under test.

- Optional BNC cable for connecting trigger to other equipment.

You need an internet connection to download the free software.

The front side of the JS320 has the connectors that connect to your system:

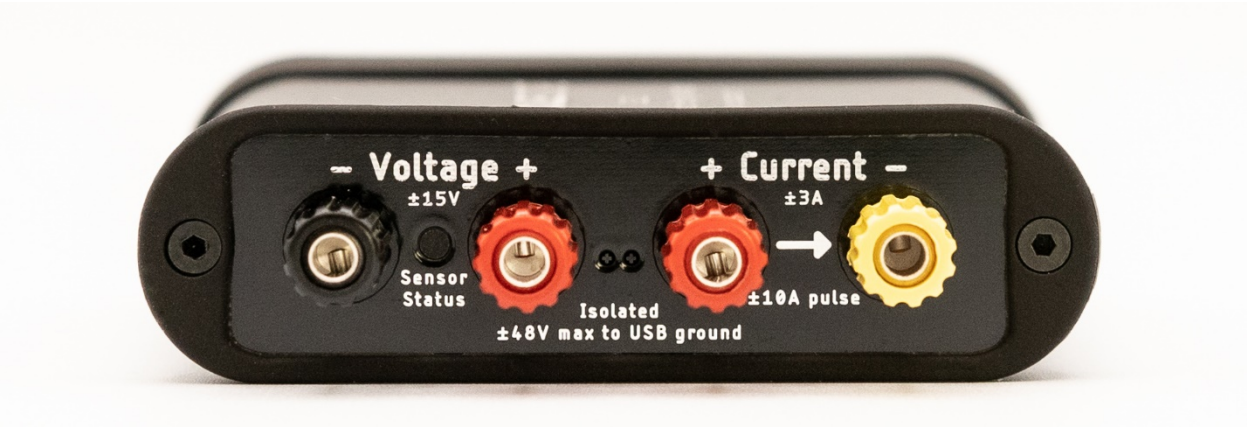

Your JS320 measures the voltage across the Voltage + and Voltage – binding posts. Your JS320 measures the current flowing through the Current + to the Current – binding posts. If you have a power source and target device, connect the positive side through the current binding posts. You can then connect the voltage signals across either your power source or your target device. For more connection examples, see Section 6.

The Sensor Status indicator is off when your JS320 is powered off or inactive. Slow flashing red indicates that the instrument is ready, but the current flow is not yet enabled. Solid green indicates that current measurement is enabled. Fast flashing red indicates that the soft fuse is engaged.

The backside of Joulescope has the host USB connector, status LED, GPIO connector, and trigger connector:

Use the provided USB cable to connect the USB host computer connector to your host computer. If your computer only has USB C ports, use the provided adapter.

The Controller Status indicator is off when the JS320 is not connected to the host computer, or the host computer has not yet activated the JS320 over USB. Microsoft Windows computers activate devices immediately when connected while macOS and Linux do not activate the device until the Joulescope software attempts to use the device. Solid blue indicates that the JS320 is activated. Solid green indicates that the JS320 device is running normally.

The GPIO connector provides four general-purpose inputs and two general-purpose outputs. See Section 9 for

details.

The BNC Trigger connector provides either a Trigger Out or a Trigger In. This Trigger allows the JS320 to synchronize data collection with other equipment.

CHAPTER

THREE

QUICK START

Install the Joulescope User Interface (UI) on your computer, as described in Installing the Joulescope UI.

Start the Joulescope UI.

Connect the Joulescope USB port to the host computer using the provided USB cable. The UI automatically detects the connected Joulescope and starts displaying statistics data.

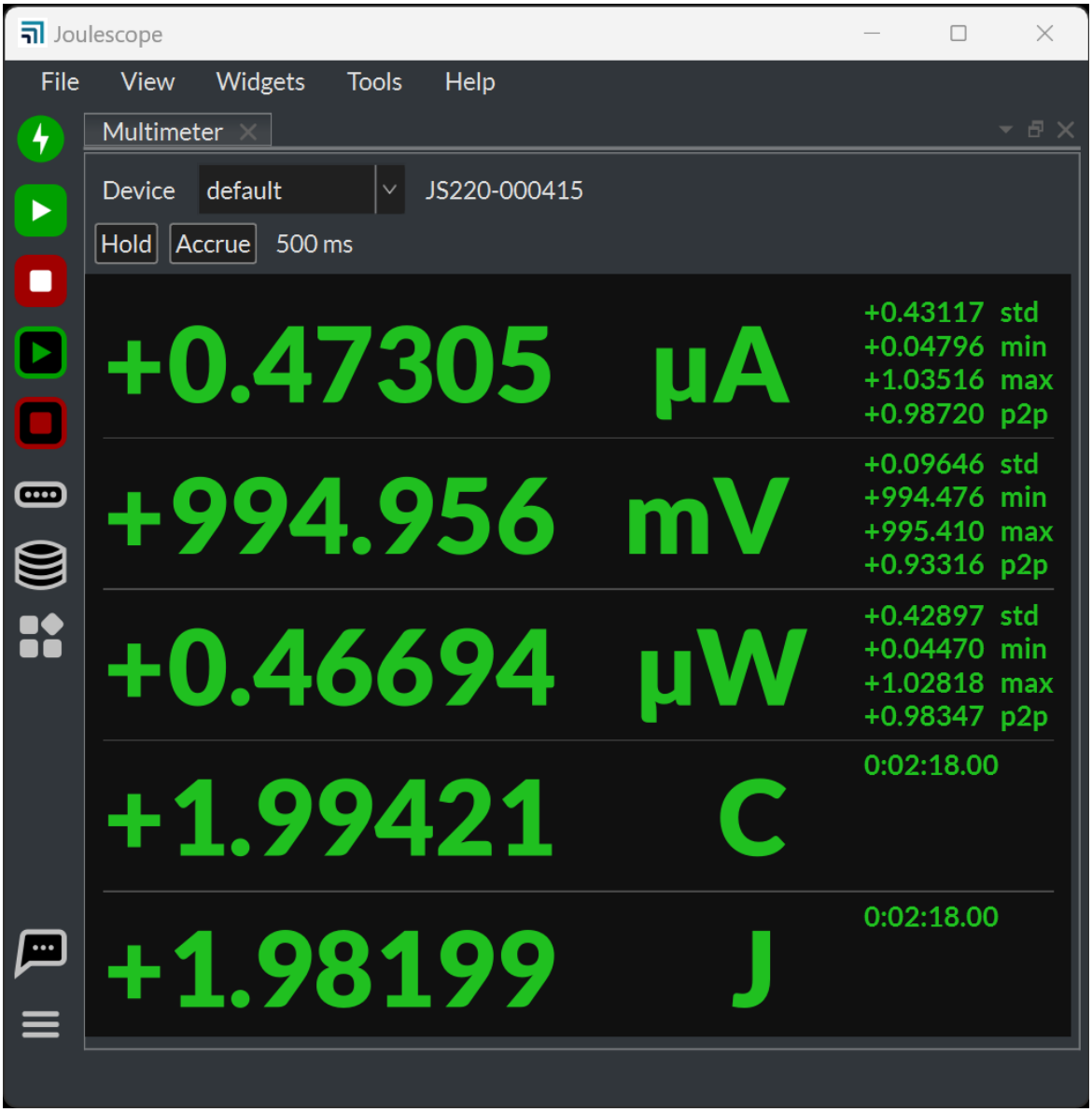

The Joulescope JS320 front panel has the **Voltage** and **Current** binding posts. The JS220 and JS220+ have the same connections.

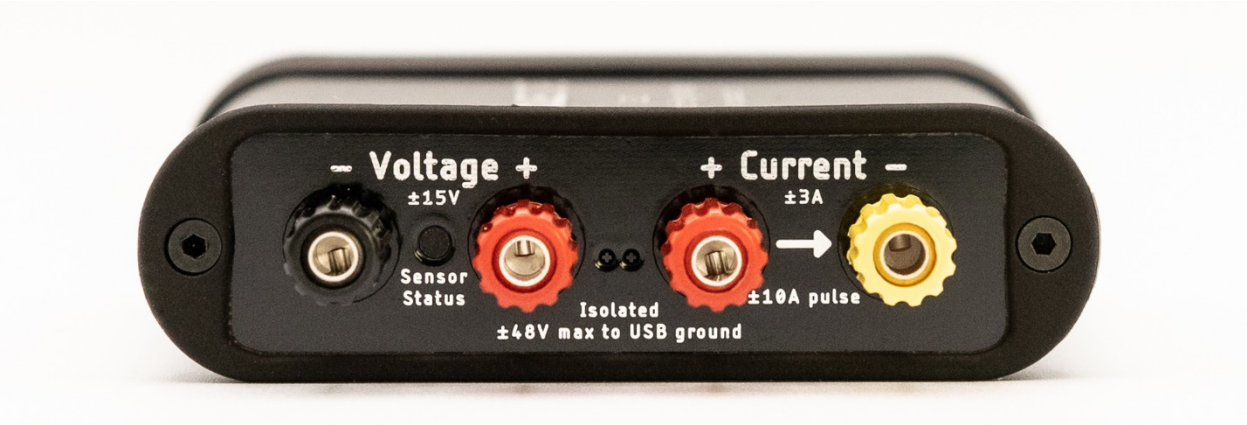

To measure the current and charge, connect the Joulescope **Current** port inline between the positive output from your power source and your target device under test. The maximum voltage between any port **Current +**, **Current -**, **Voltage +**, and **Voltage -** should never exceed ±15V. All sensor ports are electrically isolated from USB, but the voltage between any port and USB ground should never exceed ±48V.

To also measure voltage, power, and energy, connect the Joulescope **Voltage** ports across your power source's positive and negative connections. Alternatively, you can connect the **Voltage** port across your target device's positive and negative connections.

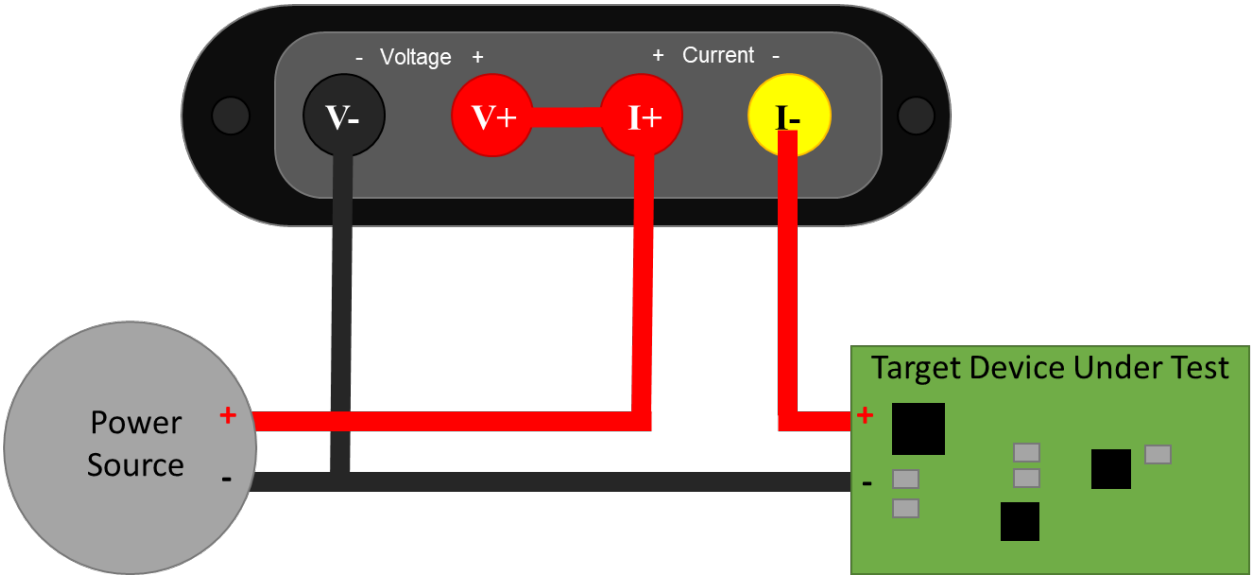

The Joulescope can be used in a variety of measurement configurations. For more common connection scenarios, see *How to Connect Your Joulescope*.

Operate your device under test. The **Multimeter** view shows current, voltage, power, charge, and energy. When you want to see waveforms over time, use the **Oscilloscope** view. Select **View** → **Oscilloscope**.

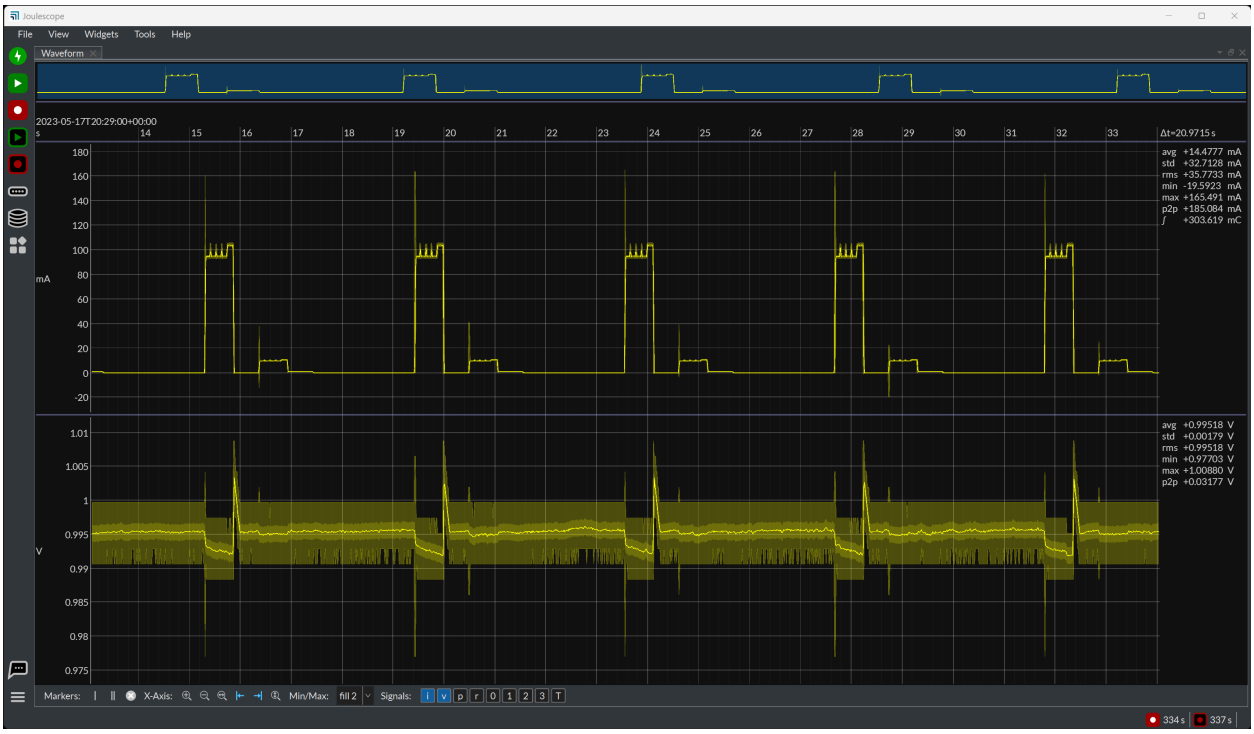

Have questions about a feature? In many cases, you can hover the mouse over an area of interest to see a **Tooltip**. Right-click (control-click on macOS) often brings up a context-sensitive menu.

For more information on the Joulescope UI, see the Joulescope UI User's Guide.

CHAPTER

FOUR

SPECIFICATIONS

The specification values are also available as js320_datasheet.yaml and in the Joulescope JS320 Datasheet.

4.1 Absolute maximum ratings

	Min	Max	Unit
USB voltage	-0.3	6	V
Max voltage applied between any port (Current +, Current -, Voltage +, Voltage -)	-20	20	V
Max voltage to USB ground from any port (Current +, Current -, Voltage +, Voltage -)	-48	48	V
Input current (powered, burst)	-10	10	A
Input current (powered, sustained)	-3	3	A
Input current (unpowered)	N/A (off)	N/A (off)	A
Storage temperature	-40	80	°C
Operating temperature	0	50	°C
Relative humidity (non-condensing)	0	95	%
Altitude from sea level	-100	2500	m
Max voltage applied to GPI relative to USB ground	-10	10	V

4.2 Mechanical

4.2.1 Instrument only

	Typical	Unit
Weight	190	grams
Width	99	mm
Length (including binding posts and BNC connector)	126	mm
Height	28	mm

4.2.2 Complete product kit

	Typical	Unit
Weight	510	grams
Width	190	mm
Length	200	mm
Height	60	mm

4.3 Recommended operating conditions

	Test condition	Min	Typical	Max	Unit
Operating temperature		10		40	°C
USB supply voltage		4.5	5.0	5.5	V
USB supply current				500	mA
Voltage applied across Voltage + and Voltage -		-15		15	V
Voltage applied across Current + and Current -	Current range off	-15		15	V
Input current	continuous	-3		3	A
Input current pulse	< 50 milliseconds, < 3A average	-10[1]		10[1]	A
Input current pulse	< 250 milliseconds, < 3A average	-5[1]		5[1]	A

1. Suitable for handling inrush currents when connecting capacitive loads.

4.4 Specification conditions

Temperature	23 °C ± 10 °C
Humidity	20% to 80% RH, non-condensing
Calibration interval	1 year[1]

1. Recommended to comply with industry-standard practices, but the Joulescope JS320 is designed not to need recalibration.

4.5 Current measurement specifications

Range	Accuracy[1]	Impedance	Guaranteed[2]
10 A[3]	±0.25% ±500 µA	0.01 Ω	±10.4 A
180 mA	±0.25% ±50 µA	0.11 Ω	±188 mA
18 mA	±0.25% ±5 µA	1.11 Ω	±18.8 mA
1.8 mA	±0.25% ±500 nA	11.1 Ω	±1.88 mA
180 µA	±0.25% ±50 nA	111 Ω	±188 µA
18 µA	±0.25% ±10 nA[4]	1111 Ω	±18.8 µA

1. Accuracy is specified as a percentage of measurement plus a fixed offset. Some instruments specify offset as a percentage of the full-scale range.
2. The highest current that this range is guaranteed to measure without saturation. Higher currents may saturate the range and potentially trip the soft fuse for that current range.
3. Max 3 A sustained. See the recommended operating conditions for higher current durations.
4. ±1.0 nA for ±5 °C over 24 hours with trim offset calibration.

The resolution depends on the noise. Noise depends on both the current range and signal bandwidth, which is limited by the sample frequency. The following table shows the typical (not guaranteed) resolution given only the JS320 self-noise with no additional external noise pickup.

Range	1 Msps resolution (typical)	10 ksps resolution (typical)	10 sps resolution (typical)	Units
10 A	1000	100	10	µA
180 mA	100	10	1	µA
18 mA	10	1	0.1	µA
1.8 mA	1000	100	10	nA
180 µA	100	10	1	nA
18 µA	10	1	0.1	nA

Test current measurement bandwidth by varying the effective load impedance. Due to load capacitance, altering the source voltage is often not a valid method of testing current bandwidth.

The JS320 is sensitive to RF radiation, which induces real current in test setups. When tested with EN61326-1 and 3 V RMS/m, the JS320 measured up to 10 µA (observed, not guaranteed) of current at several frequencies. The exact frequency susceptibility varies with cable length and configuration.

4.6 Voltage measurement specifications

Range	Accuracy[1]	Guaranteed
15 V	±0.1% ±500 µV	±15.5 V
2 V	±0.1% ±200 µV	±2.05 V

1. At V+ == I+. See the CMRR specification for extended voltage.

The resolution depends on the noise. Noise depends on both the current range and signal bandwidth, which is limited by the sample frequency. The following table shows the typical (not guaranteed) resolution given only the JS320 self-noise with no additional external noise pickup.

Range	1 Msps resolution (typical)	10 ksps resolution (typical)	10 sps resolution (typical)	Units
15 V	500	50	10	µV
2 V	100	10	2	µV

The JS320 is sensitive to RF radiation, which induces real voltages in test setups. When tested with EN61326-1 and 3 V RMS/m, the JS320 error increased by 10 mV (observed, not guaranteed) at several frequencies. The exact frequency susceptibility varies with cable length and configuration.

4.7 General specifications

	Test condition	Min	Typical	Max	Unit
Sampling frequency	25 °C		1000000		sps
Sampling frequency accuracy	25 °C	-5		5	ppm
Measurement bandwidth	-3 dB	185	195	225	kHz
Compensated bandwidth	-3 dB	280	300	350	kHz
Front panel insertions				100	

4.8 Parasitic effects specifications

	Test condition	Min	Typical	Max	Unit
Current leakage (Voltage + to -)	25 °C, ±3.3V		100		pA
Current leakage (Voltage + to -)	25 °C, ±5V		100		pA
Current leakage (Voltage + to -)	25 °C, ±15V		100		pA
Shunt resistor voltage, max	-2 to 2 A, static		20	21	mV
Burden voltage (Current + to -)	1 A, banana jacks	0	25	35	mV
Burden voltage (Current + to -)	Shunt resistor, < ±2 A			±20	mV
Shunt switching time	Over-range, < 200 ns rise time	0	0.8	1.2	µs
Measurement gap following a current range switch				0	µs
CMRR on voltage input (common mode rejection ratio)	25 °C, ±15V		-70		dB

4.9 Software-controlled fuse specifications

	Test condition	Min	Typical	Max	Unit
Current leakage (Current + to -)	25 °C, 3.3V		±5		nA
Current leakage (Current + to -)	25 °C, 5V		±7		nA
Current leakage (Current + to -)	25 °C, 15V		±28	±5000	nA
Fuse engage time	5 A		0.293		s
Fuse engage time	10 A		0.050		s

4.10 General purpose inputs and outputs

	Test condition	Min	Typical	Max	Unit
Internal 3.3V reference		3.135	3.3	3.465	V
External reference	Vref < (VUSB - 0.5 V)	Vref - 0.1	Vref	Vref + 0.1	V
Input leakage per pin	25 °C			±10	nA
Input leakage per pin				±100	nA
Output voltage high	-100 µA	Vcco - 0.1			V
Output impedance	10 mA	45	50	80	Ω
GPI sample rate			1		MSPS
Continuous output current	Per pin			±50	mA
Total power dissipation	Over output impedance			0.25	W

The Joulescope uses the TI TLV9034[1] for GPIs and the TI SN74LVC2T45[2] to drive the GPOs. Both the GPIs and GPOs are protected with the TI TPD4E1U06[3] for ESD protection.

Both gates of the TI SN74LVC2G125 drive the trigger in parallel, each through a 100 Ω resistor for 50 Ω drive.

[1] https://www.ti.com/product/TLV9034
[2] https://www.ti.com/product/SN74LVC2T45
[3] https://www.ti.com/product/TPD4E1U06

CHAPTER

FIVE

HOST SOFTWARE

The Joulescope host software runs on a host computer and communicates with the Joulescope JS320 instrument over USB 2.0 high-speed.

5.1 Joulescope User Interface

The Joulescope User Interface (UI) is the quickest and easiest way to get started with your Joulescope. The UI works with Microsoft® Windows®, Apple® macOS®, and Linux®. See the supported platforms.

For more information on the Joulescope UI, see the Joulescope UI User's Guide.

5.2 Scripts and automation

Want to go beyond the Joulescope UI? Automate a test? Integrate with a larger test setup? The Joulescope host software is ready to support you. The Joulescope software contains several layers that you can use to integrate. The easiest way to get started is with Python. You can use the original **joulescope** API or the newer, more powerful **joulescope_driver**. Both have python bindings. However, the **joulescope_driver** is a native C application, so you can integrate it with any programming language that can call into a dynamic library.

For more detail, visit the GitHub repositories for each project:

Repo name	Python package name	Description
pyjoulescope_ui[4]	joulescope_ui	The Joulescope User Interface written in QT/PySide6
joulescope_driver[5]	pyjoulescope_driver	Native Joulescope user-space driver with asynchronous publish-subscribe API. Includes Python and Node.js bindings
pyjoulescope[6]	joulescope	The Joulescope Python "driver" with synchronous API. Used pyjoulescope_driver backend.
jls[7]	pyjls	High performance file storage for Joulescope data

You can find examples of how to use Joulescope in your Python application at:

[4] https://github.com/jetperch/pyjoulescope_ui
[5] https://github.com/jetperch/joulescope_driver
[6] https://github.com/jetperch/pyjoulescope
[7] https://github.com/jetperch/jls

https://github.com/jetperch/pyjoulescope_examples

https://github.com/jetperch/joulescope_driver/tree/main/pyjoulescope_driver/entry_points

Also see the documentation for pyjoulescope and the Joulescope Driver.

The Joulescope software depends upon other software and libraries. See CREDITS.html for pyjoulescope_ui[8] and pyjoulescope[9].

[8] http://htmlpreview.github.io/?https://github.com/jetperch/pyjoulescope_ui/blob/master/CREDITS.html
[9] http://htmlpreview.github.io/?https://github.com/jetperch/pyjoulescope/blob/master/CREDITS.html

CHAPTER

SIX

HOW TO CONNECT YOUR JOULESCOPE

The Joulescope JS320 has flexible connections that enable a variety of measurements. This section describes some common test scenarios.

1. *Measure only current (ammeter)*
2. *Measure only voltage (voltmeter)*
3. *Measure power supply provided*
4. *Measure target device consumption*
5. *Measure subsystem consumption*

The Joulescope JS320 sensor provides four connections: **Voltage +**, **Voltage -**, **Current +** and **Current -**. Many test setups also include a power source that provides power and a target device under test that consumes power. We will use the following conventions for this section:

Label	Description
V+	JS320 voltage + connection
V-	JS320 voltage – connection
I+	JS320 current + connection
I-	JS320 current – connection
PS+	Power source voltage + connection
PS-	Power source voltage – connection
T+	Target device under test voltage + connection
T-	Target device under test voltage – connection

The previous-generation Joulescope JS110 had connections **IN+**, **IN-**, **OUT+**, and **OUT-**. The following table maps JS110 connections to JS320 connections:

JS110	JS320
IN+	**V+** and **I+**
IN-	**V-**
OUT+	**I-**
OUT-	**V-**

Note that the JS320 provides more flexibility by separating **V+** and **I+**.

6.1 Measure only current (ammeter)

The Joulescope JS320 features independent current and voltage channels. You can use your Joulescope JS320 to measure the current through any wire. The JS320 will also compute total charge, the integral of current.

The following figure shows a simple current source with a wire. The current source polarity and arrow are for convention only, and current can flow in both directions.

Simply insert the JS320 inline:

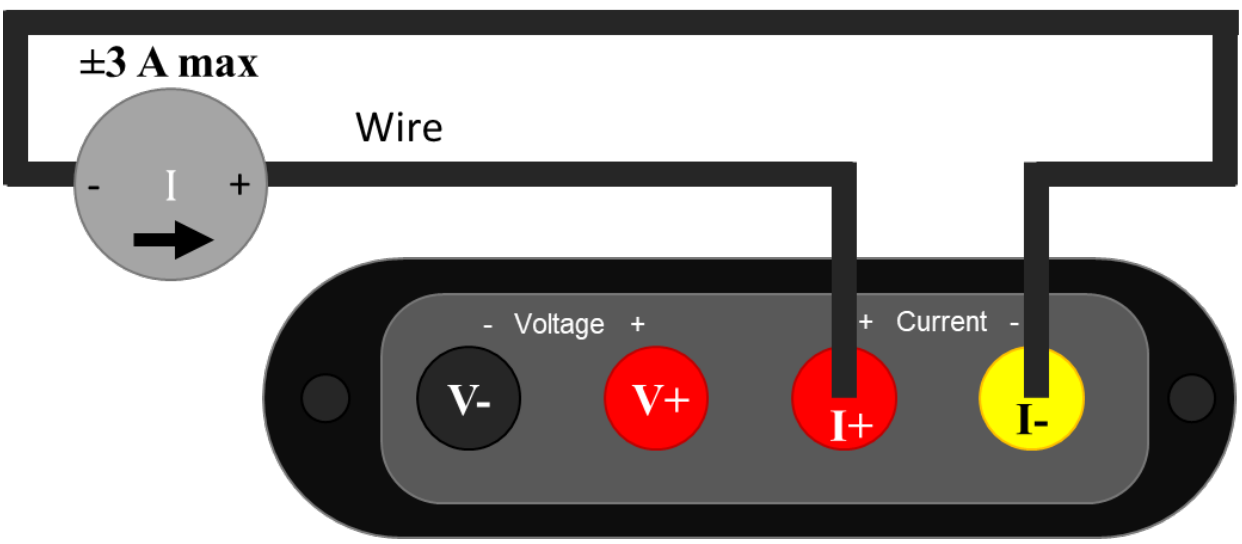

Since your JS320 can measure current flowing in either positive or negative direction, the current flow direction indicator is for convention only. If connected in the opposite direction, the measurement polarity (sign) is reversed. When connecting your JS320 like this, ensure that the current source does not exceed the Joulescope JS320 limit of ±3 A.

During normal operation, the JS320 is designed to keep the voltage at **I+** almost equal to the voltage **I-**. The JS320 uses a resistor to sense the current flowing between **I+** and **I-**, but it limits the shunt resistor voltage to 20 mV maximum, at least for all current under 2 A.

When not connected, you will observe random voltage measurement values that may change over time. The JS320 has extremely high input impedance on **V+** and **V-**. Most test instruments add a known resistance, often

1 MΩ or 10 MΩ, that pulls **V+** to **V-**. The JS320 focuses on low-power measurement, and such a resistor would consume meaningful current. The drawback is that unconnected voltage measurements are affected by nearby electromagnetic fields and the input bias currents of the JS320's input stage opamps. To eliminate fluctuating voltage readings while using the JS320 as an ammeter, connect **I+** to both **V+** and **V-**.

6.2 Measure only voltage (voltmeter)

The Joulescope JS320 features independent current and voltage channels. You can use your Joulescope JS320 as a one channel, high-impedance, isolated oscilloscope.

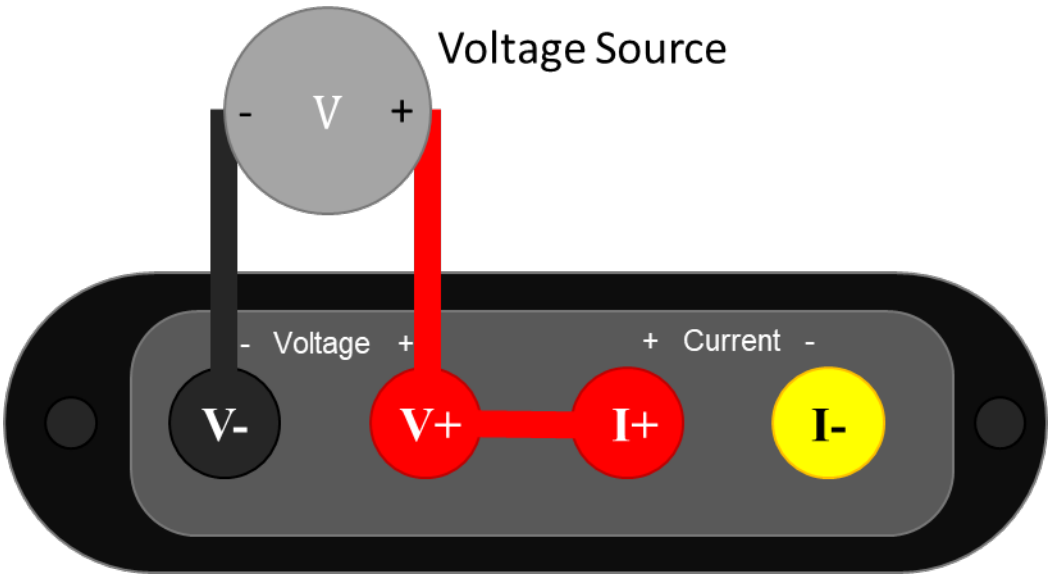

Note the extra connection between **V+** and **I+**. With the standard binding post front panel, you can insert a short length of wire to make this connection. The **V-** and **V+** signals must remain within ±15 V of **I+** to measure correctly. The easiest way to ensure this condition is to connect **I+** and **V+** as shown. Also ensure that the JS320 **Current Range** is set to anything other than **off**. Unlike most test equipment, the voltage inputs are completely floating and isolated, so you need to make this connection.

6.3 Measure power supply provided

The JS320 can measure the current, voltage, power, charge, and energy provided to a target device under test by a power source. A typical system consists of a power source and a target device under test.

The power source can be anything that provides electricity including a battery, battery pack, rechargeable battery, bench power supply, mains wall adapter, USB, and power regulators.

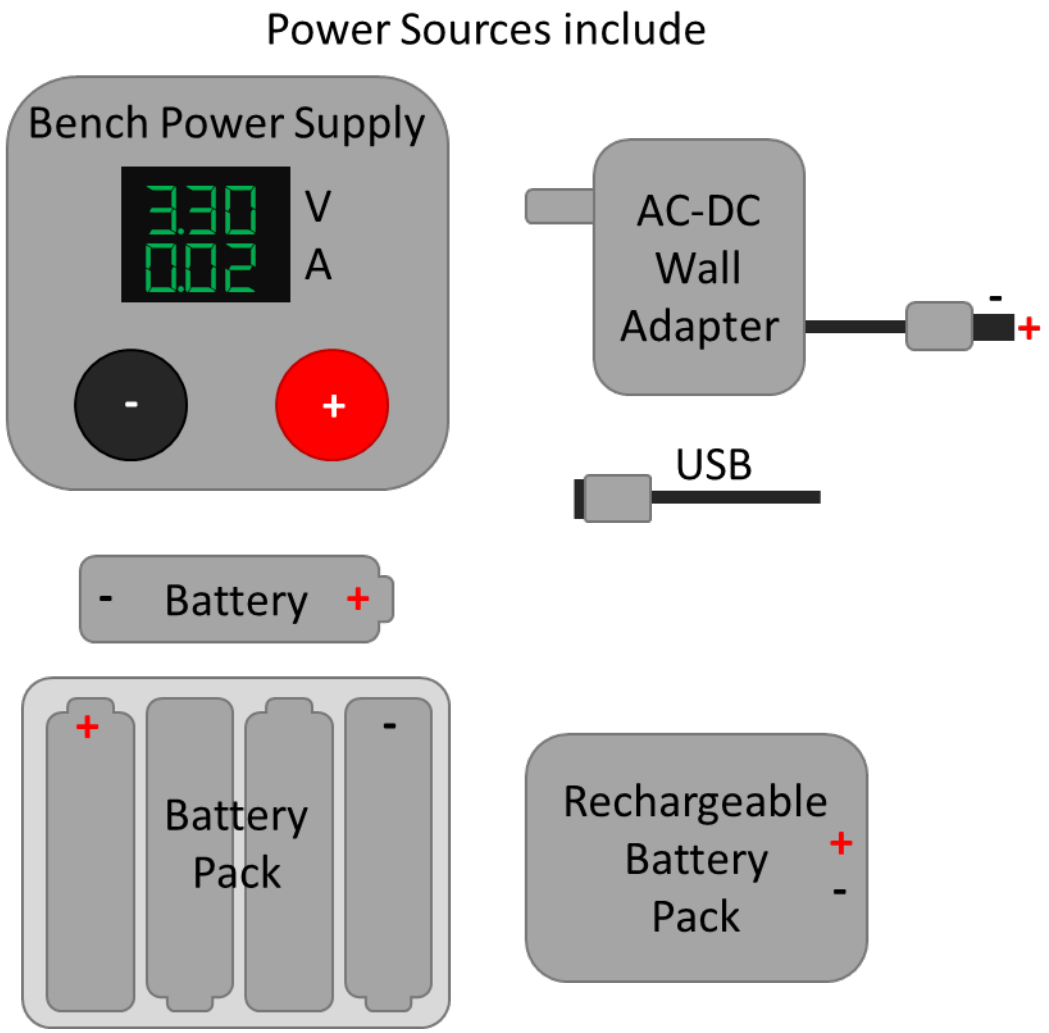

The target device under test can include product prototypes, custom hardware under development, development boards, systems, and subsystems.

The easiest way to connect your JS320 is as an ammeter measuring current in the + wire and as a voltmeter across the power source **PS+** and **PS-**, like this:

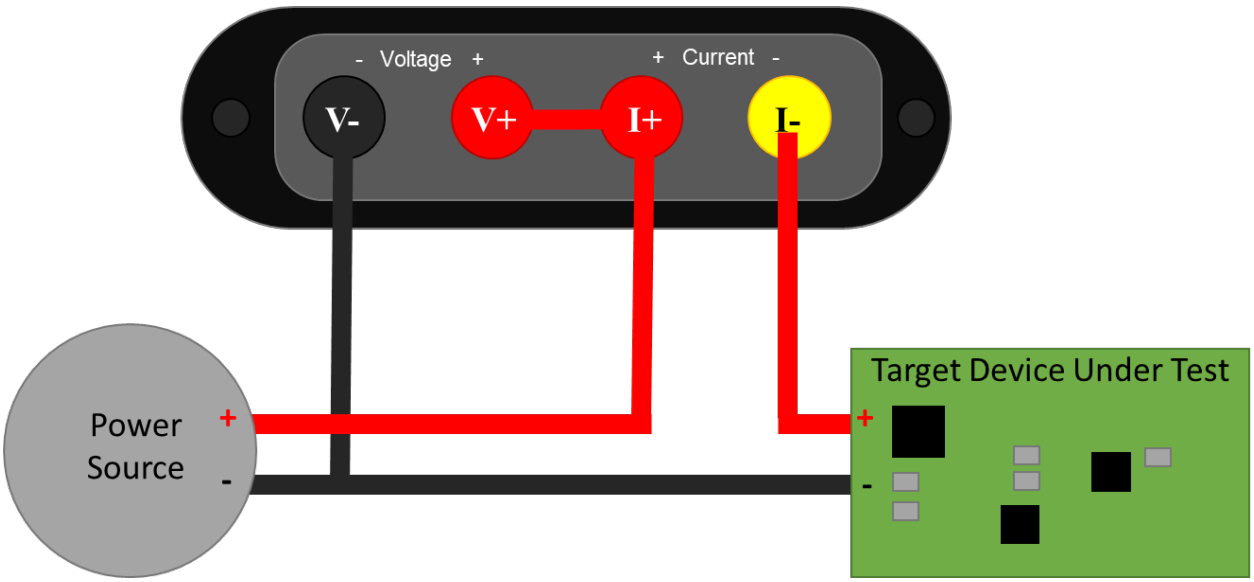

Note that the **V-** wire is connected to **PS-** and **T-**. It does not connect to **PS+**. This setup configures the Joulescope JS320 in high-side current sense configuration.

If you are familiar with the previous-generation Joulescope JS110, this configuration is the exact same as connecting **IN+** to **PS+**, **IN-** to **PS-**, **OUT+** to **T+**, and **OUT-** to **T-**. The FP02-BNA front panel provides the JS320 with the exact same connections as the JS110.

The JS320 can alternatively be used to measure current on the low-side wire connected to **PS-**.

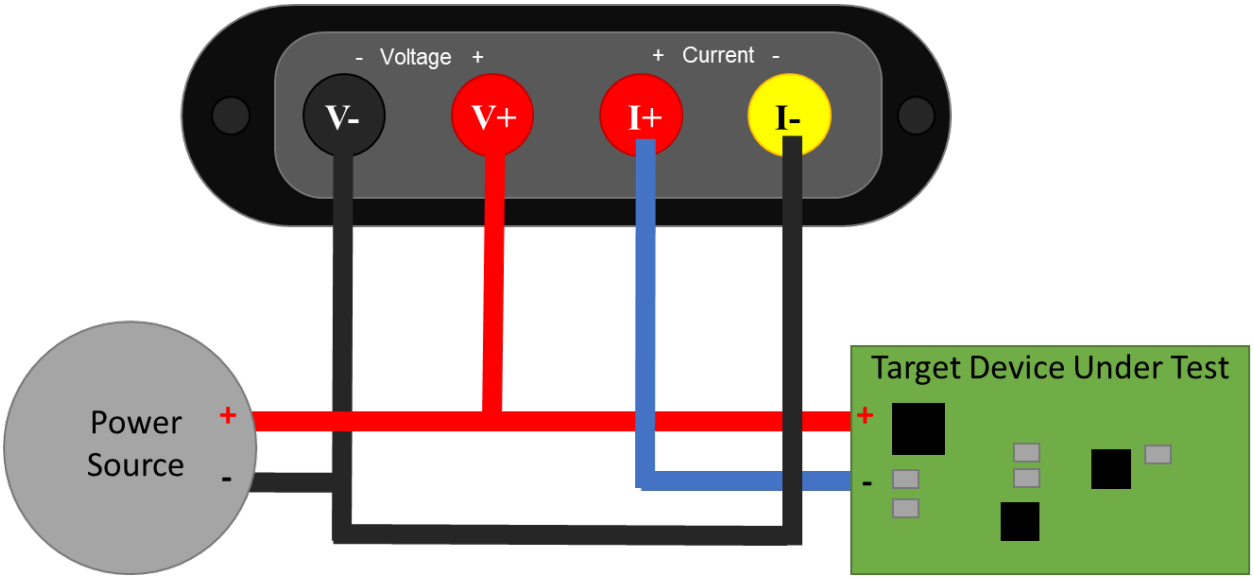

6.4 Measure target device consumption

The JS320 can measure the current, voltage, power, charge, and energy consumed by a target device. The JS320 and wires all have resistance (impedance). When current flows, this resistance causes a voltage drop according to Ohm's Law: V = I * R. While this energy is provided by the power source, it is consumed by the connections between the power source and the target device under test. This loss should not be included in

the measurement for target consumption. The JS320 is specifically designed to enable more accurate, 4-wire Kelvin-connection measurements:

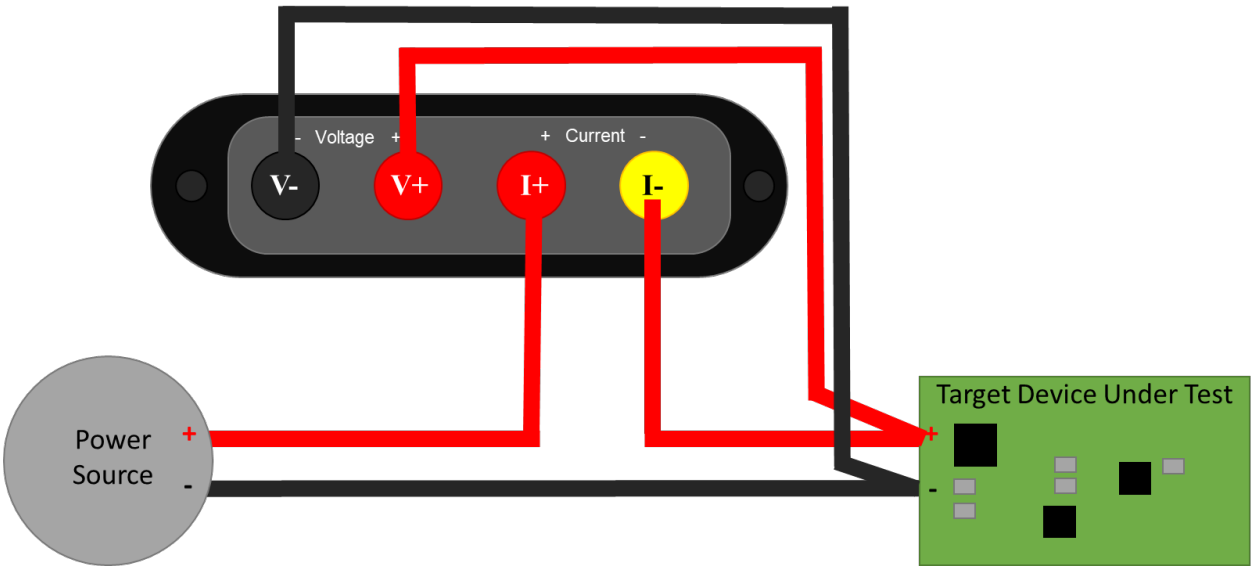

To minimize noise pickup, you want to minimize the loop area. The easiest way to do this is twist the insulated + and – wires together from **PS+** and **PS-** all the way to **T+** and **T-**, like this

Just before connecting to the **T+**, connect the JS320, connecting the additional wires to the JS320 **I+** and **I-** together. Finally, twist the insulated **V+** and **V-** wires together.

Shorter wires result in both lower resistive voltage losses and lower noise pickup. However, for applications where the target device contains an RF transmitter, you do not want the cables too short. You want to ensure that the JS320 does not become part of the antenna. A good rule of thumb is that you should locate all test equipment one wavelength away from the RF transmitter. One wavelength is approximately 33 cm at 915 MHz and 12 cm at 2.4 GHz.

6.5 Measure subsystem consumption

The JS320 can measure the current, voltage, power, charge, and energy consumed by subsystem on the target device under test. Many devices and prototype boards have jumpers to simplify current measurement in system. However, some hardware devices require the user to remove a resistor or cut a printed circuit board trace to measure the subsystem current consumption. In either case, you want to connect the JS320 as an ammeter inline with the power source to the subsystem to measure current. The JS320 will also compute charge, the integral of current.

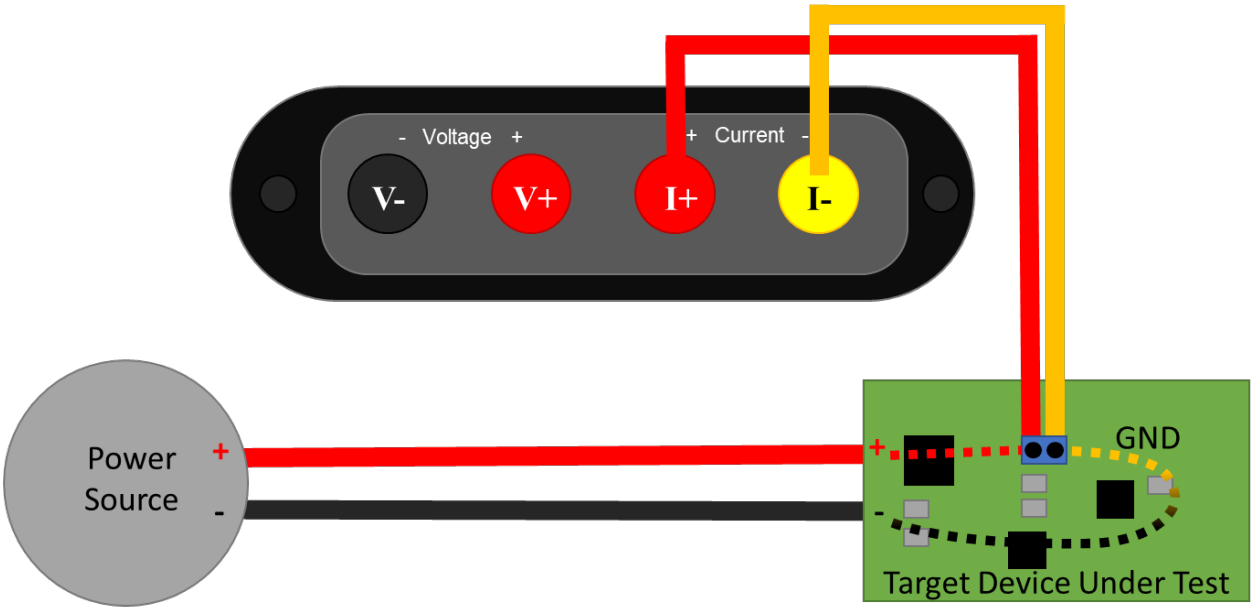

For voltage, power, and energy, also connect the JS320 voltmeter:

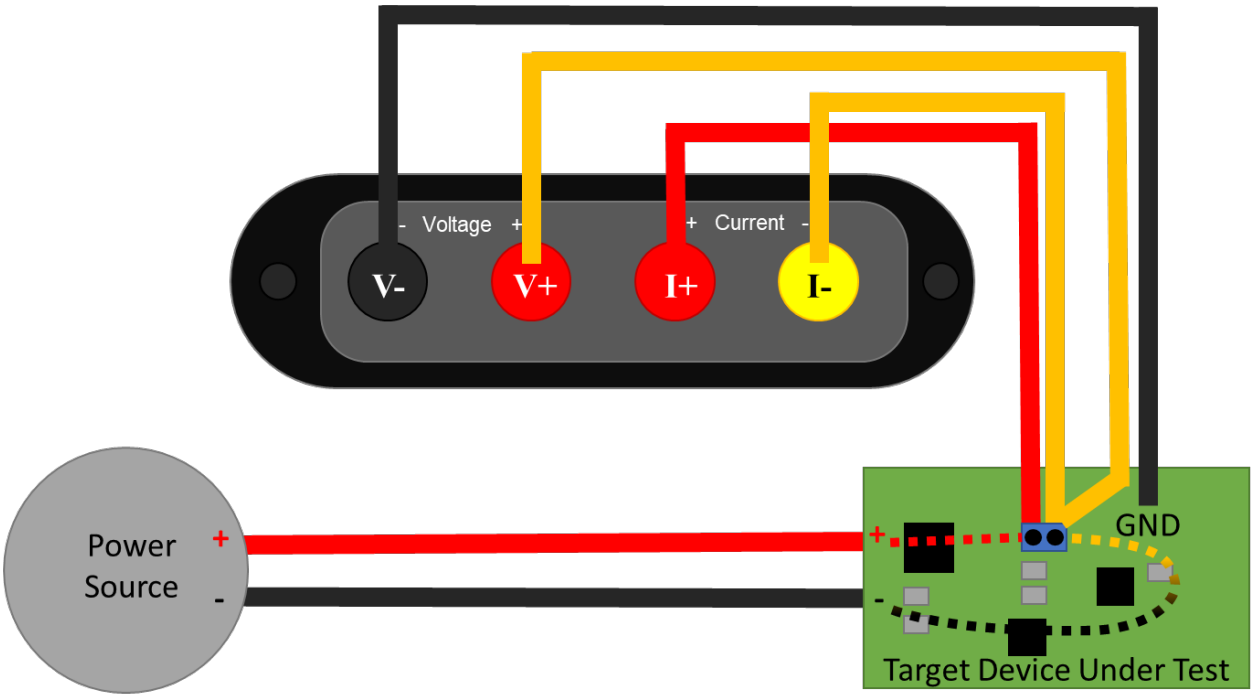

This connection recommendation shows a Kelvin-style 4-wire connection, which helps improve accuracy and minimize noise pickup. Connect the JS320 using two wire pairs, one to measure current and one to measure voltage. Twist the insulated **V+** and **V-** wires together and the **I+** and **I-** wires together to further reduce noise pickup. For less accuracy and perhaps a quicker setup time, connect **V+** to **I+** and **V-** to **PS-**.

6.6 Measure higher voltages

If your system can tolerate additional leakage current on the supply side, then you can use a simple resistive divider to measure higher voltages.

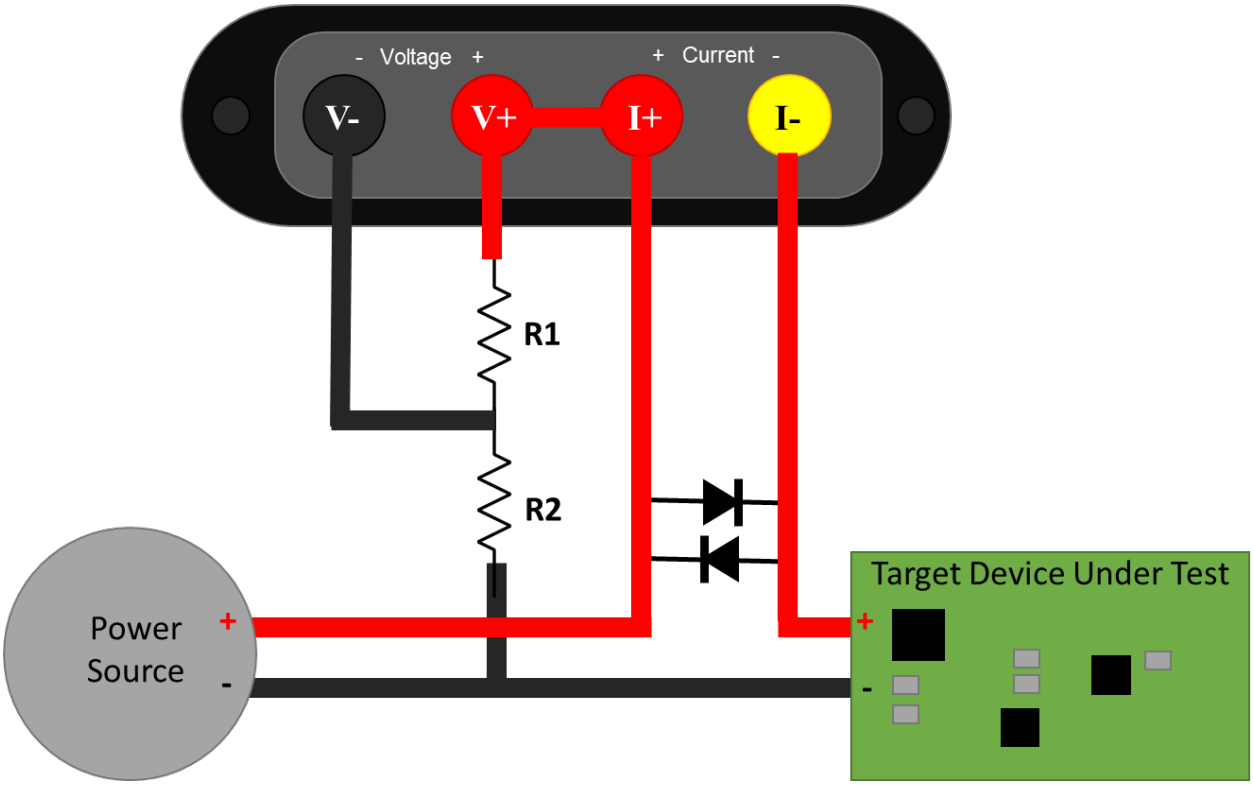

Warning

The voltage from I+ to I- must never exceed ±20 V. While the Joulescope is operating, this voltage is very small. However, when the JS320 is unpowered, a fuse engages, or you use the disconnect target power feature, then the voltage across I+ to I- will be the full power supply voltage. We recommend adding the diodes as shown to prevent damaging your Joulescope in these conditions. Ensure that the diodes are rated for the full current consumed by the target device under test.

The actual voltage as a function of the measured voltage is:

$$V_{ACTUAL} = \frac{R_1 + R_2}{R_1} V_{MEASURED}$$

You need to select values for R_1 and R_2 that keep $V_{MEASURED}$ within ±14.5 V, keep leakage current low enough, and preserve measurement bandwidth. The RC filter combination limits the measurement bandwidth:

$$f = \frac{1}{2\pi R_2 C}$$

Leakage current is:

$$i = \frac{V_{ACTUAL}}{R_1 + R_2}$$

Typical V- input capacitance is on the order of 10 pF, so $R_1 = R_2 = 1$ MΩ gives approximately 16 kHz of measurement bandwidth and ±29 V of range. At 29 V, the leakage current is 14.5 µA. This additional leakage current comes from the power source, but it is not measured by the JS320.

In the Joulescope UI, you can set the **Voltage scale** in the **Device control** widget to adjust the displayed values to account for the voltage divider.

Ensure that V-, V+, I+, and I- are always within ±48 V of USB ground.

You can consider an active buffer solution if your system cannot tolerate the leakage current to give the desired measurement bandwidth.

CHAPTER

SEVEN

THEORY OF OPERATION

Joulescope simultaneously measures current and voltage, and then computes power and energy. Joulescope combines a voltmeter and a fast auto-range current shunt ammeter.

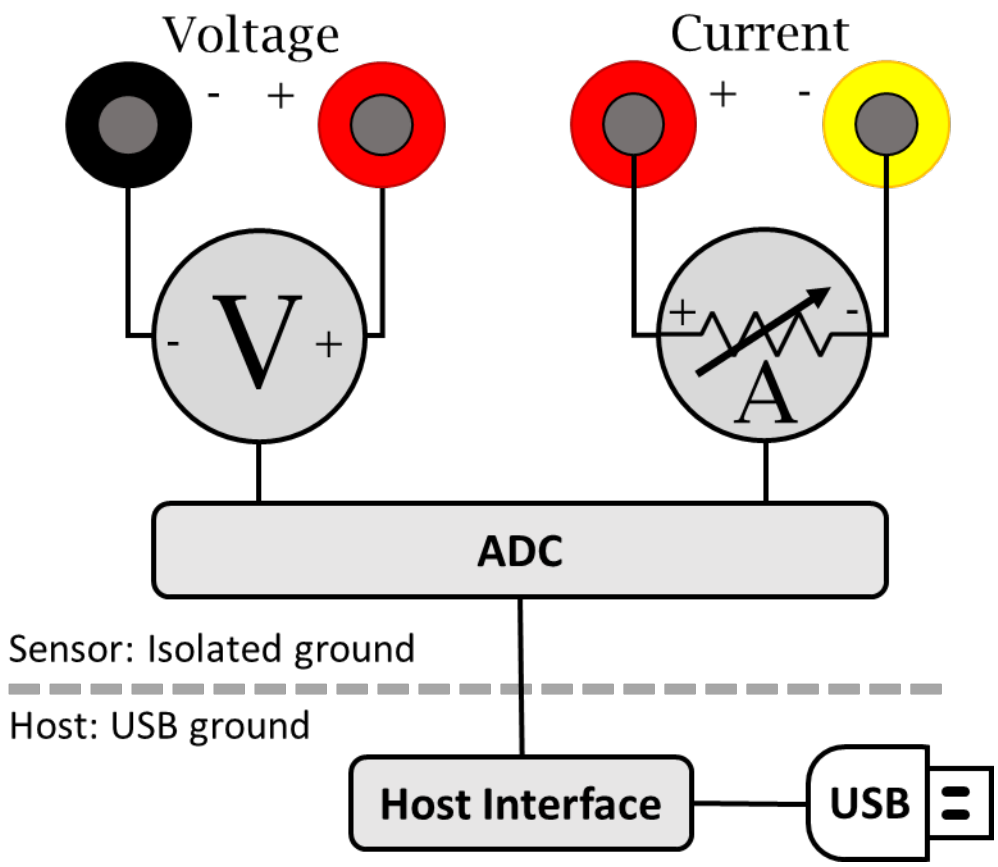

7.1 Ammeter

The shunt ammeter consists of six (6) current ranges with six (6) different shunt resistor values ranging from 0.01 Ω to 1111 Ω. Joulescope actively selects the best shunt resistor to keep the maximum voltage across the shunt resistor to 20 mV. This low voltage drop minimizes the impact on the device under test. Other equipment, including standard multimeters, have a much larger burden voltage that can cause the target device to behave unusually.

The Joulescope amplifies the voltage across the shunt resistor and then uses an analog-to-digital converter (ADC) to digitize the value. The ADC digitizes the value 2 million times per second to create 2 million samples per second (SPS). The Joulescope instrument processes these ADC values on the instrument using a sensor-side FPGA.

Given a known resistor value and the measured voltage, the Joulescope uses Ohm's Law to compute current. The FPGA applies calibration coefficients to convert the measured voltage into the measured current. Joulescopes are individually calibrated and tested in the factory to ensure that every Joulescope performs to specification.

The instrument then downsamples by 2 from 2 Msps to 1 Msps. This downsampling saves USB bandwidth without affecting the measurement bandwidth.

7.1.1 Autoranging

As the current changes, the ammeter selects the optimal shunt resistor value. Joulescope uses dedicated hardware to quickly select the appropriate shunt resistor to avoid impacting the device under test. The shunt value selection uses the ADC output, dedicated over-range analog hardware, and a unique algorithm that runs in an FPGA. The FPGA selects the active shunt resistors using MOSFETs, which were carefully qualified to meet Joulescope's demanding performance characteristics.

The shunt resistor selection does take some time. How fast does the shunt resistor need to change to have a minimal impact? The linearized equation is:

$t = C * \Delta V / \Delta I$

Let's take a typical example. The target device takes 3.3V and can tolerate a temporary 3% (0.03) voltage glitch on a 1 amp change. If the target device has 10 µF of capacitance, the required shunt resistor switching time is approximately:

$10\ \mu F * 3.3\ V * 0.03 / 1\ A = 1\ \mu s$

Joulescope was designed to achieve 1 µs switching speed to meet this demanding case. Most target systems have larger capacitance and less dramatic step current changes. In all cases, the shunt resistor selection is always make-before-break to ensure uninterrupted connectivity to the target device.

7.1.2 Optimizing for Accuracy

For many applications, the JS320 performs sufficiently without any additional configuration. However, additional configuration can improve accuracy for measuring lower-current systems, such as Bluetooth devices. Any system that never consumes more than 180 mA can benefit from additional configuration.

When the JS320 switches current ranges, the JS320 activates a MOSFET to select the new shunt resistor and deactivates the MOSFET for the previous shunt resistor. All MOSFETs are effectively capacitors between their gate and the source/drain. Activating and deactivating a MOSFET results in charge injection. While we have carefully selected these MOSFETs to minimize charge injection, it is not zero. You may observe a brief spike on the order of 300 ns. The JS320 may also measure this spike, but it will be spread in time due to the JS320's measurement bandwidth.

The second effect is that the impedance from **Current +** to **Current -** changes very quickly. Many targets have large bypass capacitors. Since capacitors resist instantaneous voltage changes, the result is that a real current may flow over the shunt resistor to charge or discharge the capacitor to account for the new JS320 impedance.

This current is real, and it cancels out over time. However, it's often not what we want to measure, so it can be distracting for some systems.

When the JS320 autoranges on over-current, it always autoranges up to the maximum configured range, which is 10 A by default. It will then downrange as needed to the optimal range. While this behavior guarantees the 1 µs transition time for all support loads, it may result in increased error due to the 10 A current range error rating. You can limit this maximum range for lower current targets to improve performance:

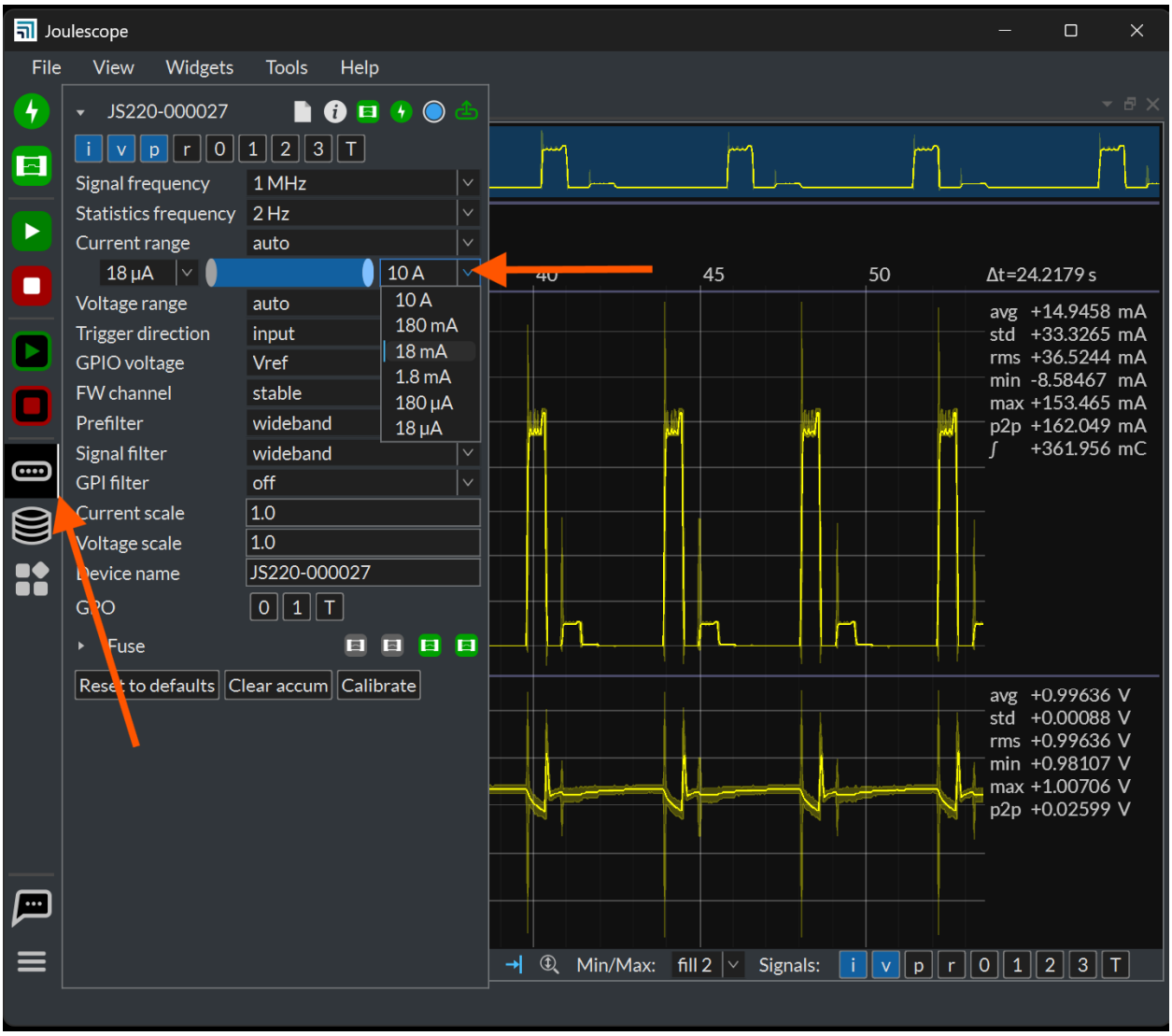

When setting the current limit, ensure that the waveform never exceeds the current range value when viewed at the full 1 MHz sample rate. Otherwise, the JS320's measurement will saturate, causing significantly increased inaccuracies. The JS320 does contain a soft-fuse feature for each current range to help prevent damage to the instrument if you select too low of a maximum current range.

You can also increase the minimum current range that may be affected by the higher input impedance. The most common reason to use this feature is when connected to a DC-DC switching converter with inadequate upstream bulk capacitance.

7.2 Voltmeter

The voltmeter measures the voltage between **Voltage +** and **Voltage -**. The voltmeter scales the input voltage, and uses an analog-to-digital converter (ADC) to digitize the value. The Joulescope instrument sends the voltage samples, along with the current samples, to the host computer. The software applies the calibration to convert from ADC values to actual voltage.

The voltmeter has two different ranges, and you can manually select the best range for your application. The 2V range provides higher resolution for smaller voltages, while the 15V range allows for larger voltage measurements.

The voltmeter intentionally omits the pull resistors to ground, typically 1 MΩ to 10 MΩ for most multimeters and oscilloscopes. However, **Voltage +** and **Voltage -** will float when unconnected. The voltmeter measurement is only valid once **Voltage +** and **Voltage -** are both connected to within ±15V of the **Current +** terminal. See Section 7.5 for more detail.

7.3 Host Computer

The Joulescope instrument requires a host computer to operate. The Joulescope instrument sends 2 million current and voltage samples per second immediately to the host computer over USB. Unlike traditional oscilloscopes, a Joulescope is always capturing data. The terms "trigger" and "sample buffer" do not fully apply to the Joulescope device, since all sample data arrives at the host computer. The Joulescope User Interface (UI) temporarily stores capture data in a circular buffer. The UI allows you to adjust the buffer size to use your host computer's RAM. Joulescope can also record to a file, and the capture size is only limited by your computer's available storage on your hard disk drive or solid-state drive.

The Joulescope host software Is open-source. The pyjoulescope "driver" communicates with the appropriate operating system USB driver. Joulescopes use Microsoft's WinUSB on Windows, which is included by default with the Windows operating system. On Linux and macOS, Joulescope uses the popular, open-source libusb driver. The pyjoulescope driver provides an easy-to-use scripting environment. You can also use the driver to build integrated applications, such as the Joulescope UI, that use the Joulescope instrument data.

7.4 Power, Energy, Charge, and Statistics

Joulescopes only measure current and voltage. The Joulescope software uses math to compute the power, energy, and charge. Power is the current multiplied by the voltage:

$P = V * I = V^2 / R = I^2 * R$

Energy is the integral of power over time.

$$E = \int P \, dt$$

When we talk about energy, we often mean the energy consumed over a specific time interval, which is the definite integral:

$$E = \int_{t=0}^{T} P \, dt \approx \sum_{n=0}^{N} P_n \, \Delta t$$

The Joulescope host software performs the discrete-time Euler integration shown to the right. The Joulescope software carefully manages the numerical precision to ensure that it computes energy correctly. IEEE double-precision floating-point numbers do not provide sufficient precision.

Charge is the integral of current over time.

$$C \;=\; \int_{t=0}^{T} I\,dt \;\approx\; \sum_{n=0}^{N} I_n\,\Delta t$$

Charge and energy are mathematically similar. Both voltage and current contribute to energy, but only current contributes to charge.

7.5 High impedance / low leakage

Joulescope measures currents at nanoamp resolutions and accuracies. Many contemporary devices have input impedances of 1 MΩ to 10 MΩ, which is not good enough. At 3.3V, a 10 MΩ load draws:

3.3V / 10 MΩ = 330 nA

Joulescope features a combined input impedance and leakage current of approximately 1 GΩ. This high input impedance allows Joulescope to make accurate and precise low current measurements.

7.6 Electrical isolation

The sensor side of Joulescope is electrically isolated from the host computer. This isolation allows you to insert Joulescope into your test system without worrying about ground issues, including ground loops and ground noise. The JS320 sensor-side isolated ground is referenced to **Current +**.

CHAPTER

EIGHT

HOW TO SWAP THE FRONT PANEL

Joulescope comes standard with a banana jack front panel. However, Joulescope is designed to be flexible and can support other connector types.

The front panel design is open source, and available on GitHub:

https://github.com/jetperch/js220_end_panels

The JS320 is fully compatible with all JS220 end panels and accessories.

To swap the front panel, you will need:

- 2 mm Allen wrench (included)
- The new front panel

Swapping the panel is easy, but you do need to take proper precautions to avoid damaging your Joulescope. The JS320 can be damaged by static electricity that you don't even notice. When you expose the Joulescope main board, be sure only to handle it by the board edges. Follow these steps carefully:

- Completely disconnect the Joulescope, including **Current**, **Voltage**, **GPIO**, **Trigger**, and **USB** ports.
- Use the Allen wrench to remove the two screws at the sides of the existing front panel.
- Gently push the Joulescope JS320's trigger connector into the Joulescope body. This action will push the front panel out. Expose about ½" or 1 cm.
- Grab the sides of the main board in one hand, being careful not to touch any other part of the board.
- Grab the existing front panel by the sides and carefully pull it directly out.
- Grab the new front panel by the sides, align the pins, and carefully push it in. Be careful to ensure that the light pipe fits into the front panel.

- Fully seat the front panel in the black plastic bezel. You may need to gently guide the board to ensure that the USB connector, trigger connector, and light pipe fit in the back panel.
- Use the Allen wrench to install the two screws at the sides of the existing front panel.

CHAPTER

NINE

GPI & GPO

The Joulescope contains four (4) general-purpose inputs (GPI) and two (2) general-purpose outputs (GPO) located on the GPIO connector to the left of the host USB connecter. The JS320 includes a GPIO cable harness that can simplify connecting the GPIO to target devices and breadboards. The BNC Trigger connector located to the right of the host USB connector can be configured as either an additional general purpose input or output.

The JS320 software can record the input signals and control the output signals. The input signals allow the JS320 to monitor other equipment and your device under test. The output signals can be used to control other equipment or the device under test. The user interface can display inputs time-synchronized with current, voltage, and power in the oscilloscope view.

One intended application for the GPIs is to allow the target microcontroller firmware to identify areas of interest. The microcontroller can toggle bits so that you can easily see the energy consumption in the marked time windows.

The GPIO and Trigger are referenced to USB ground. Many applications using Joulescope will want isolated GPI/GPO for improved performance. When selecting an isolation solution, consider:

- Electrical isolation
- Self-powered target interface with very low power from target device – leakage currents only
- Variable voltage technology levels with an external reference voltage
- ESD protection
- Overvoltage protection (GPO)

- Short circuit protection (GPO)
- Very high (GΩ) input impedance (GPI)

To control the JS320's GPIO, use the **Device Control Widget**. While you can add this widget to the current view, the quickest way to make a change is by clicking the **Device Control** icon on the **Sidebar**:

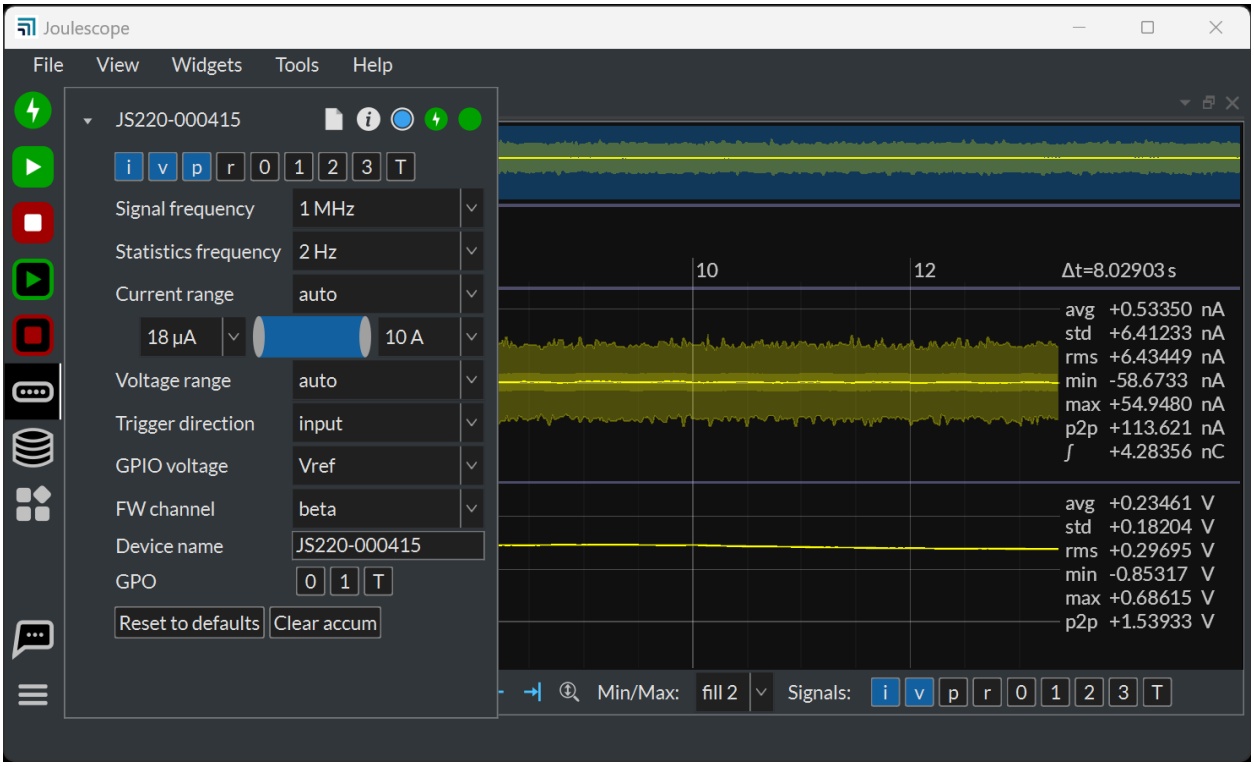

You can enable the GPI signals 0, 1, 2, 3, and T by enabling the signal at the top. To also view them in the Waveform Widget, you also need to enable the signal in the Waveform Control at the bottom (by default) of the Waveform Widget. You can toggle the GPO signals 0, 1, and T by clicking the GPO at the bottom.

The GPIO includes an external Vref signal. When using the GPIO with your device under test, connect Vref to the supply voltage on the device under test. Using Vref ensures that the input threshold and output voltage match the target system. Using Vref also ensures that the outputs do not backpower the device under test.

Alternatively, the JS320 can use an internal 3.3V reference voltage. In both cases, Vref determines the output voltage high level. The input threshold voltage is one half of this voltage.

The connector part number is Molex 90130-3210[10] or equivalent. Compatible connectors include Molex . Molex 219658-1103 is a compatible off-the-shelf cable assembly.

[10] https://www.molex.com/en-us/products/part-detail/901303210

CHAPTER

TEN

FUSE

The Joulescope JS320 includes a fuse feature. The fuse is software-controlled and operates using the measured current and existing shunt selection MOSFETs. The fuse implements four different channels:

1. User 1 Fuse
2. User 2 Fuse
3. Range Fuse
4. Max Fuse

The Range Fuse and Max Fuse are configured to protect your Joulescope JS320 from damage. You can configure the two User Fuses to protect your connected target equipment and power source.

The JS320 uses an algorithm that emulates traditional fuses. The algorithm contains coefficients that allow the fuse to "heat up" and "cool off". Like a traditional fuse, the algorithm operates on power (current squared). For each time step, the algorithm is:

$$a_n = a_{n-1} + i^2 \Delta t + a_{n-1} K \Delta t$$

If $a_n > T$, then the fuse engages and breaks the circuit from **Current +** to **Current -**.

If a fuse engages, first investigate what caused the overcurrent condition. Modify your test setup to prevent the overcurrent condition from occurring. If you are using the Joulescope UI, press the icon on the sidebar to clear all engaged fuses. You can also clear individual fuses for each instrument using the **Device Control** widget.

The fuse feature was added on 2023-10-26 with FPGA 1.1.0 and FW 1.1.0. The latest version of the Joulescope UI will automatically update your JS320 to include this fuse feature.

10.1 Max Fuse

The Max Fuse protects your JS320 from over-specification current events. The engage time versus a fixed input current is:

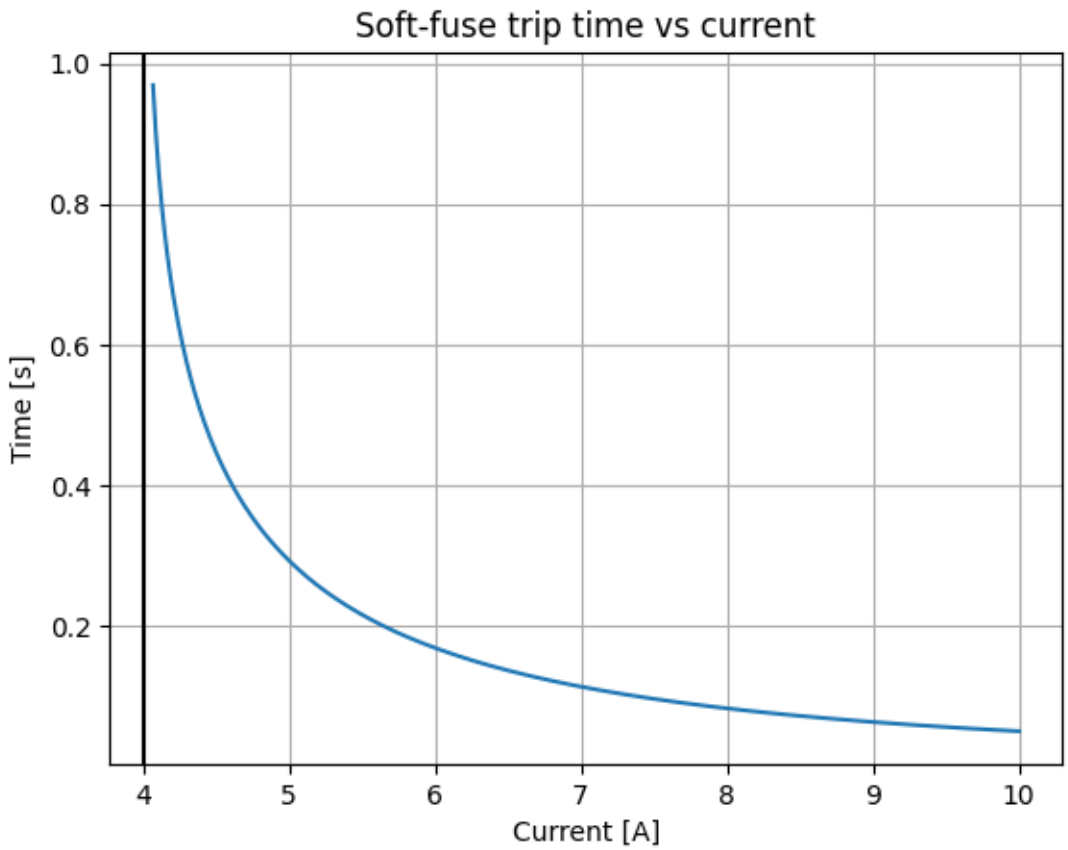

10.2 Range Fuse

The Range Fuse protects your JS320 for each current range. This fuse is only meaningful when you manually select a fixed current range. While in the default "auto" current range mode, the JS320 will always autorange before this fuse engages.

The response for each current range is:

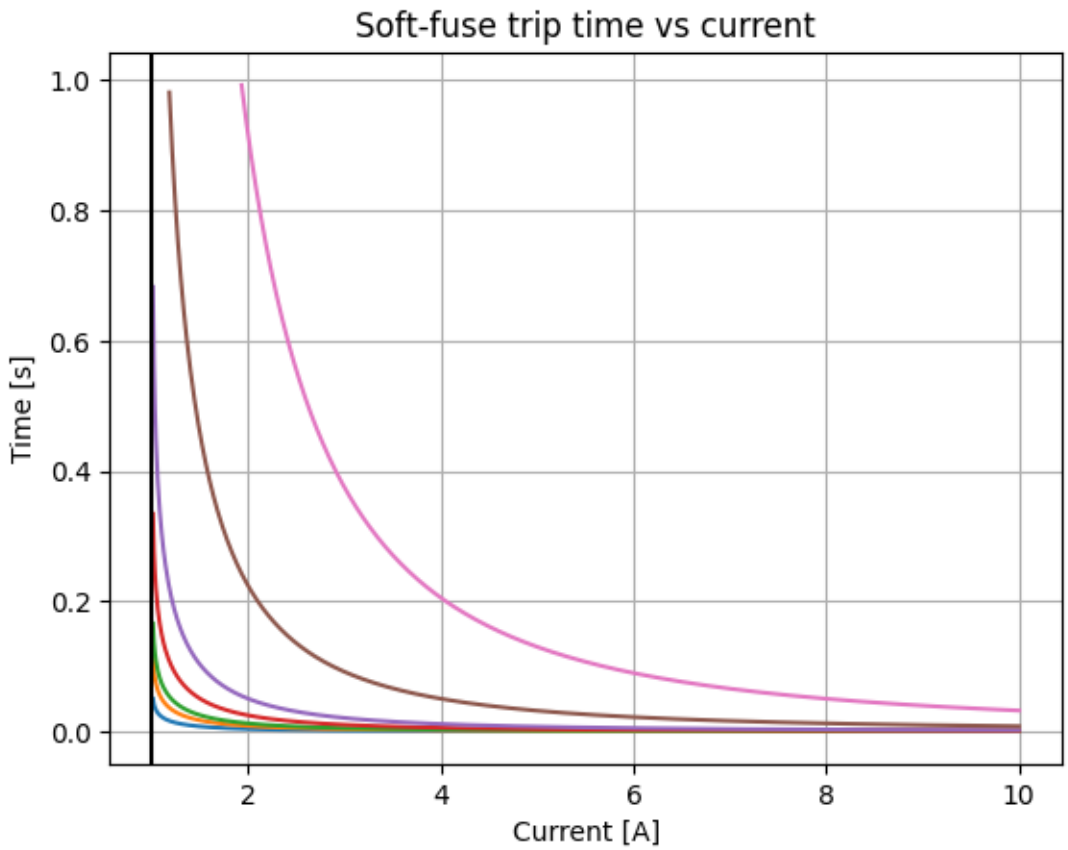

10.3 User Fuses

The JS320 includes two optional, user-configurable fuses. You can use these fuses to protect your connected equipment with a current response that is tuned to your equipment. Note that the Max Fuse and Range Fuse are always active. If you configure a User Fuse to be less responsive, then the fixed fuse will engage first.

Specifying the two coefficients T and K directly is not intuitive. Instead, the UI allows you to specify two current thresholds and a duration. The first threshold is the minimum trip current. Any current less than this first threshold will never cause the fuse to engage. A constant current at the second threshold for the given duration will cause the fuse to engage. Together, these three constants determine the fuse response. When you select the constants, the UI will display the resulting response curve. The following figures show the response curve with the same thresholds but different durations:

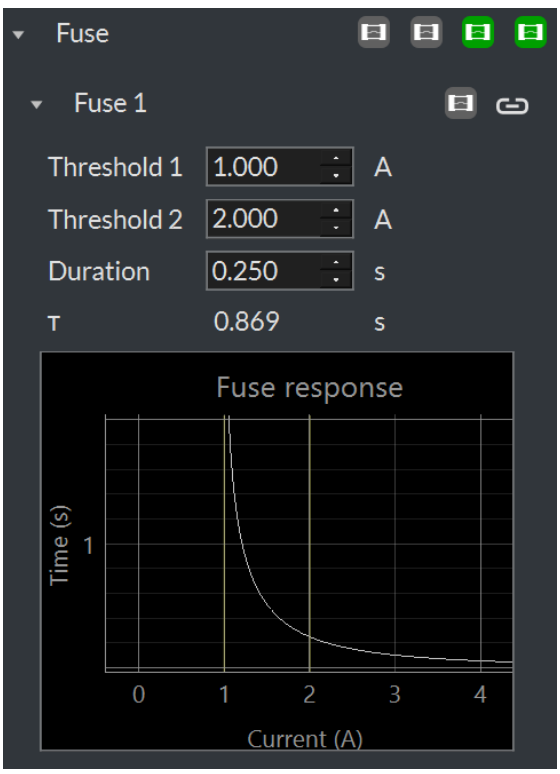
Fuse
Fuse 1
Threshold 1
1.000
A
Threshold 2
2.000
A
Duration
0.250
s
T
0.869
s
Fuse response
Time (s)
1
0
1
2
3
4
Current (A)

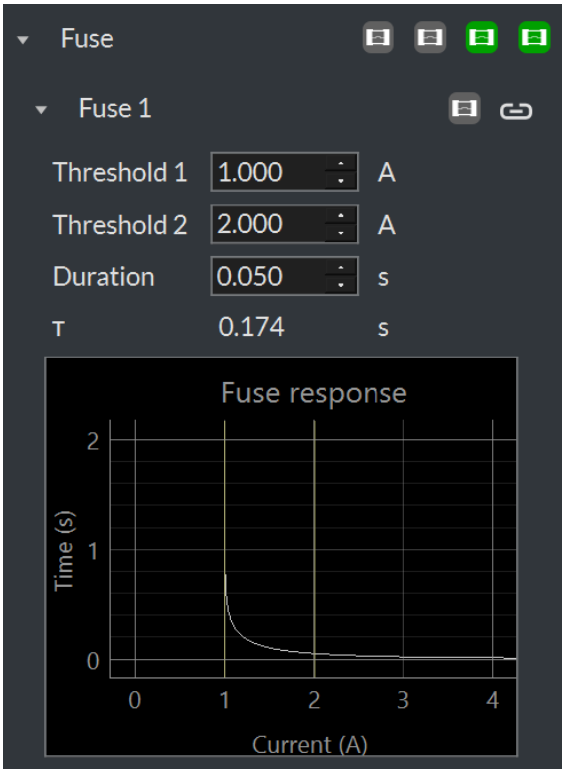
Fuse
Fuse 1
Threshold 1
1.000
A
Threshold 2
2.000
A
Duration
0.050
s
T
0.174
s
Fuse response
Time (s)
2
1
0
0
1
2
3
4
Current (A)

CHAPTER

ELEVEN

ELECTRICAL ISOLATION

The Joulescope is electrically isolated between the USB interface and the sensor terminals. Joulescope is rated to ±48V between USB ground and any of sensor terminals: **Current +**, **Current -**, **Voltage +**, and **Voltage -**. The ±48V is limited by the aluminum enclosure and the fit within low-voltage safety requirements.

The individual component ratings far exceed this specification. The components are:

Part #	Mfgr	Description	Isolation working	Isolation 60s	Isolation 1s
750316030	Wurth	Transformer	400 VRMS	2500 VAC	3125 VAC
ISO7762	TI	Digital isolator	445 VRMS		4500 VRMS

The printed circuit board (PCB) clearance between the isolated sensor side and the USB host side is 1 mm. The use of an aluminum enclosure effectively limits the isolation voltage and requires that USB chassis ground surrounds the sensor edges.

While all the sensor terminals are isolated from USB ground, they are not isolated from each other. The sensor is referenced to **Current +**, and the other sensor terminals must remain within ±15V from **Current +**.

CHAPTER

TWELVE

FILTERS AND FREQUENCY RESPONSE

The Joulescope JS320 measures current and voltage each at 1,000,000 times per second.

12.1 Analog Filter

The JS320 includes a 2^(th) order analog linear phase Bessel filter with constant group delay for exceptional time domain clarity. The filters has a 446 kHz bandwidth. The signal chain has additional RC poles that bring the total analog bandwidth down to 377 kHz:

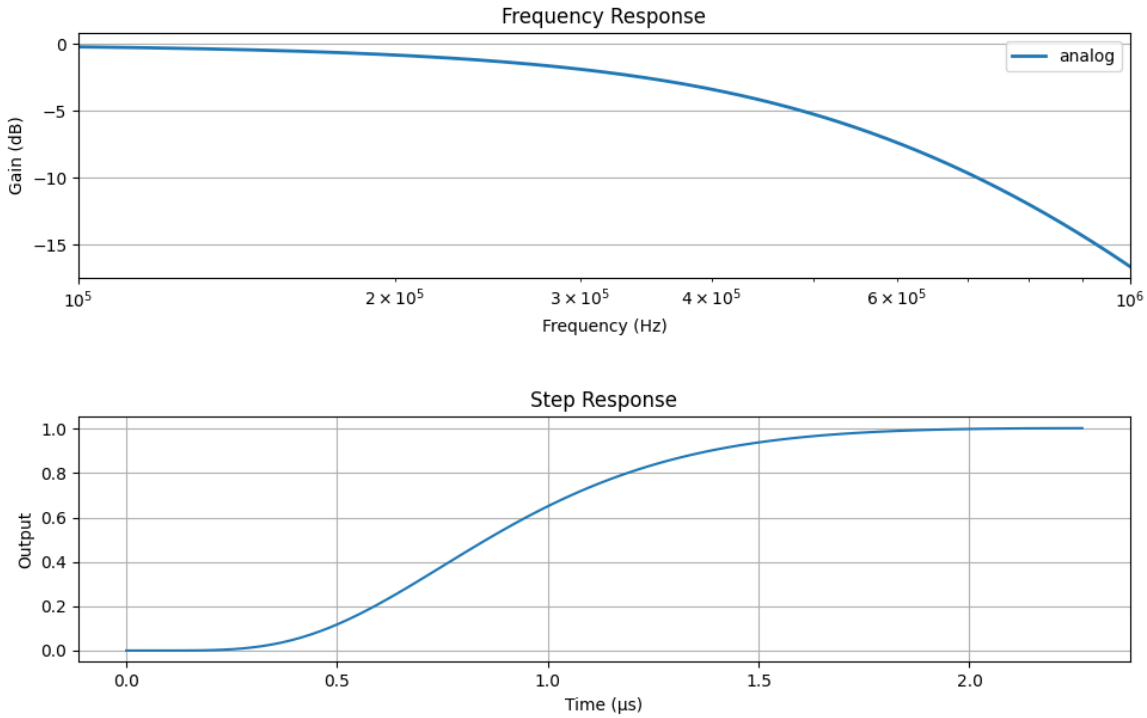

12.2 Downsampling

You may configure the JS320 for downsampling, which reduces the sample rate for measurements that do not need the full bandwidth. For example, 1 kHz is often suitable for long-term captures that only need to observe target activity. Downsampling reduces storage requirements and may reduce the USB communication demands.

The JS320 performs downsampling on the instrument. This feature allows you to reduce the USB data rate to support more simultaneous Joulescopes on a single USB root hub. The downsampling filter is a sinc1 filter, also called a boxcar or simple average filter. This filter implementation is straightforward. An output is computed once every N input samples, and each output is the average of the previous N input samples. The output rate is 1/N of the input rate. The minimum output rate supported by the on-instrument downsampling is 1 kHz.

The sinc1 filter is maximally smooth in time. It guarantees no overshoot, even on square waves. For applications where you are attempting to size the power supply current capacity, this filter is ideal.

While the sinc1 filter is guaranteed to preserve DC accuracy, the sinc1 filter's frequency response rolls off gently. You can encounter aliasing where higher frequency components are represented as lower frequency components. The following plot shows an example decimation by 100 for the 10 kHz output rate:

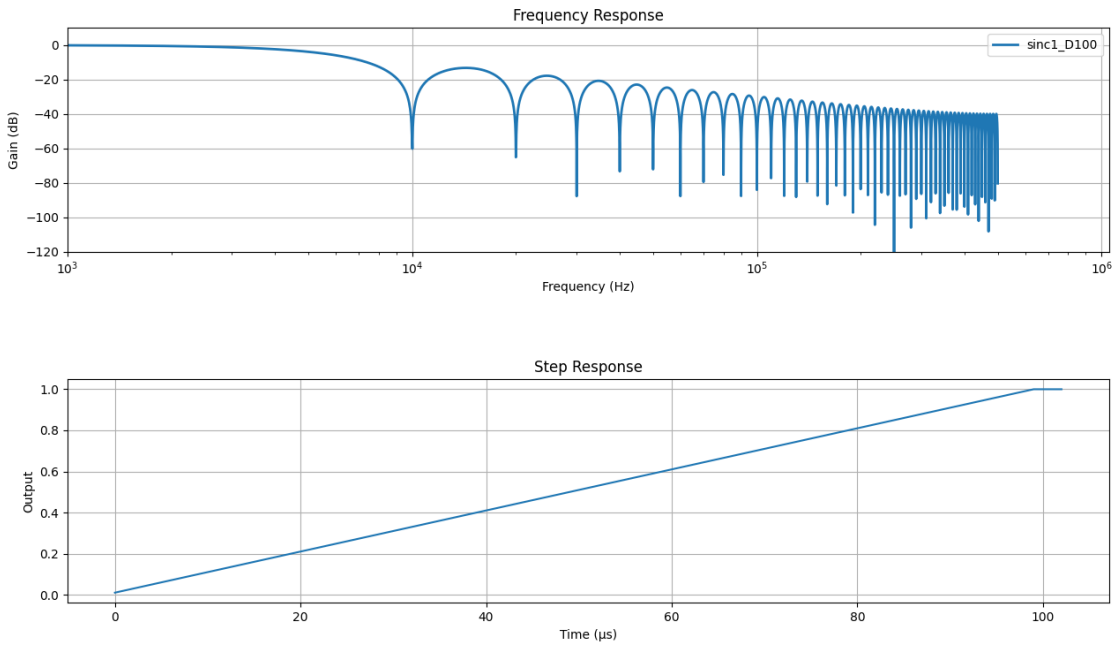

While sinc1 filters provide an intuitive time response, their frequency response cutoff is gentle. As a result, higher frequency content aliases into the resulting signal. However, sinc1 filters have zeros at all multiples of the sampling frequency, which perfectly preserves the DC value.

CHAPTER

THIRTEEN

TYPICAL BEHAVIOR

This section contains information regarding typical Joulescope JS320 behavior.

This section will be updated in a future document release.

CHAPTER

FOURTEEN

MAINTENANCE

The Joulescope JS320 is designed for minimal maintenance. To clean your Joulescope, disconnect all wires from the unit. You can gently wipe the unit with a damp cloth using water only. Using rubbing alcohol or other cleaning agents may damage your Joulescope. Do not submerge.

Joulescope is factory-calibrated and should continue to function within specifications over its operating life. For critical or demanding applications, you may choose to follow industry-standard practices and have your Joulescope recalibrated annually. Tra-Cal, located in Maryland, USA, provides authorized ISO 17025:2017 calibration and recalibration. You can submit your request at:

https://www.tra-cal.com/request-a-quote

Recalibrating Joulescope requires custom equipment and trained personnel. Only Jetperch LLC and Tra-Cal are authorized to perform recalibration.

14.1 Verification Procedure

Calibration should normally find that the Joulescope instrument still operates within specification. Although calibration can only be performed by authorized vendors, any facility capable of performing precision multimeter calibration can verify that a Joulescope is operating within specification. This section describes the verification procedure.

14.1.1 Preliminary operations

1. Download the host computer software from https://www.joulescope.com/pages/downloads
2. Install the software
3. Download the validation spreadsheet from https://download.joulescope.com/docs/validation/index.html
4. Connect your Joulescope to the host computer using the provided USB cable.
5. Select **View.** If the first **Multimeter** is not already selected, select it.
6. Select **View**. If **Control** is not already selected, select it.
7. Open the validation worksheet in Excel and fill in the Device Under Test Information.
8. Select File → Save As for this device calibration.
9. Optionally configure your Test Uncertainty Ratio (TUR) to your desired level. We recommend following industry-standard practices and set TUR to 4 or greater.

14.1.2 Voltage Validation Process

1. Connect calibrator OUT terminals to the Joulescope **Voltage** terminals, observing polarity.
2. Connect **Voltage +** to **Current +**. Leave **Current** – open.
3. In the Joulescope UI, select **Voltage Range** to 15V.
4. Configure the calibrator to the target voltage.
5. Record the actual calibrator voltage, the calibrator's uncertainty at that voltage, and the Joulescope's measured voltage as displayed by the Joulescope UI.
6. Repeat 4 and 5 for each target voltage.
7. Repeat 2 through 6 for the 2V range.

The following image shows the calibration spreadsheet:

Voltage Measurement

15V Range

Target	Units	Applied	Applied Uncertainty	Expected Accuracy	Test Uncertainty Ratio	Lower Limit	As Measured	Upper Limit
-14.500	V			0.010	0.0	-0.010		0.010
-12.000	V			0.010	0.0	-0.010		0.010
-9.000	V			0.010	0.0	-0.010		0.010
-6.000	V			0.010	0.0	-0.010		0.010
-3.000	V			0.010	0.0	-0.010		0.010
0.000	V			0.010	0.0	-0.010		0.010
3.000	V			0.010	0.0	-0.010		0.010
6.000	V			0.010	0.0	-0.010		0.010
9.000	V			0.010	0.0	-0.010		0.010
12.000	V			0.010	0.0	-0.010		0.010
14.500	V			0.010	0.0	-0.010		0.010

2V Range

Target	Units	Applied	Applied Uncertainty	Expected Accuracy	Test Uncertainty Ratio	Lower Limit	As Measured	Upper Limit
-1.950	V			0.002	0.0	-0.002		0.002
-1.500				0.002	0.0	-0.002		0.002
-1.000	V			0.002	0.0	-0.002		0.002
-0.500				0.002	0.0	-0.002		0.002
0.000	V			0.002	0.0	-0.002		0.002
0.500	V			0.002	0.0	-0.002		0.002
1.000	V			0.002	0.0	-0.002		0.002
1.500	V			0.002	0.0	-0.002		0.002
1.950	V			0.002	0.0	-0.002		0.002

During the test process, you should fill in all light-blue cells with measurement data. All TUR values should be green. Yellow indicates that the test setup lacks sufficient accuracy. All "As Measured" values should be green. Red indicates that the Joulescope does not meet specifications.

14.1.3 Current Validation Process

The current calibration process can be performed using several methods. In all cases, the goal is to generate a current close to the target current. Strict accuracy on the generated current is not required. However, a reference measurement is required.

The general process is

1. Select the **Current Range** in the Joulescope UI.
2. Configure the target current.

3. Record the applied current as measured by the reference, reference's uncertainty at that current, and the Joulescope's measured current as displayed by the Joulescope UI.
4. Repeat 2 and 3 for each target current
5. Repeat 1 through 4 for each current range.

Current Measurement

10 A Range

Target	Units	Applied	Uncertainty	Accuracy	Uncertainty	Lower Limit	Measured	Upper Limit
-3.00	A			0.00	0.0	0.00		0.00
-2.00	A			0.00	0.0	0.00		0.00
-1.00	A			0.00	0.0	0.00		0.00
-0.50	A			0.00	0.0	0.00		0.00
0.00	A			0.00	0.0	0.00		0.00
0.50	A			0.00	0.0	0.00		0.00
1.00	A			0.00	0.0	0.00		0.00
2.00	A			0.00	0.0	0.00		0.00
3.00	A			0.00	0.0	0.00		0.00

180 mA Range

Target	Units	Applied	Applied Uncertainty	Expected Accuracy	Test Uncertainty Ratio	Lower Limit	As Measured	Upper Limit
-180.00	mA			0.15	0.0	-0.15		0.15
0.00	mA			0.15	0.0	-0.15		0.15
180.00	mA			0.15	0.0	-0.15		0.15

18 mA Range

Target	Units	Applied	Applied Uncertainty	Expected Accuracy	Test Uncertainty Ratio	Lower Limit	As Measured	Upper Limit
-18.000	mA			0.015	0.0	-0.015		0.015
0.000	mA			0.015	0.0	-0.015		0.015
18.000	mA			0.015	0.0	-0.015		0.015

1.8 mA Range

Target	Units	Applied	Applied Uncertainty	Expected Accuracy	Test Uncertainty Ratio	Lower Limit	As Measured	Upper Limit
-1.8000	mA			0.0015	0.0	-0.0015		0.0015
0.0000	mA			0.0015	0.0	-0.0015		0.0015
1.8000	mA			0.0015	0.0	-0.0015		0.0015

180 µA Range

Target	Units	Applied	Applied Uncertainty	Expected Accuracy	Test Uncertainty Ratio	Lower Limit	As Measured	Upper Limit
-180.00	µA			0.15	0.0	-0.15		0.15
0.00	µA			0.15	0.0	-0.15		0.15
180.00	µA			0.15	0.0	-0.15		0.15

18 µA Range

Target	Units	Applied	Applied Uncertainty	Expected Accuracy	Test Uncertainty Ratio	Lower Limit	As Measured	Upper Limit
-18.000	µA			0.030	0.0	-0.030		0.030
0.000	µA			0.030	0.0	-0.030		0.030
18.000	µA			0.030	0.0	-0.030		0.030

Note that many of the test cases are for a 0.0 amp target current. In this setup, you can simplify the setup and leave the Joulescope instrument disconnected, or optionally short the Joulescope **Current** terminals with a banana jumper wire.

Numerous valid test equipment methods exist to generate and accurately measure the target current. You may select a method that is appropriate for your equipment. The Joulescope JS320 has a very large current range, and you will need to accurately measure from 18 µA to 3 A. You may need to employ more than one method to cover the entire current range with a sufficient TUR. Possible methods include:

Method 1: Reference current source

If you have a reference current source, connect the current source to the Joulescope **Current** terminals, observing polarity.

In step (2), directly configure the reference current source to generate the target current.

In step (3), read the applied current from the reference current source.

Method 2: Reference ammeter with current source

Connect an inaccurate current source + terminal to the Joulescope **Current +** terminal. Connect the **Current** – terminal to the reference ammeter + terminal. Connect the reference ammeter – terminal back to the current source – terminal.

In step (2), configure the inaccurate current source to the target current.

In step (3), read the applied current from the reference ammeter.

Method 3: Reference ammeter with voltage source and variable load resistor

Connect an inaccurate voltage source + terminal to the Joulescope **Current +** terminal. Connect the Joulescope **Current** – terminal to one terminal of a variable load resistor. Connect the other variable load resistor terminal to the reference ammeter + terminal. Connect the reference ammeter – terminal to the Joulescope inaccurate voltage source – terminal.

In step (2), select a target voltage and resistance combination to give the target current as computed using Ohm's law: I = V / R. Configure the load resistance, configure the voltage source, then enable the voltage output. Ensure that the voltage stays between 0 and 15V. We recommend adding a step 3.5 to disable the voltage output before changing the load resistance for the next target current.

In step (3), read the applied current from the reference ammeter.

14.2 Offset Calibration

The JS320 is designed to remain in spec without calibration. However, you can perform offset calibration to improve accuracy for demanding measurements.

The JS320 supports offset calibration for both current and voltage. The Joulescope UI 1.0.40 and later includes offset trim calibration. Before starting a trim calibration, please run your JS320 for at least 5 minutes to allow the temperature to stabilize. To start a current offset trim calibration, select the **Device Control** widget in the sidebar, then press **Calibrate**:

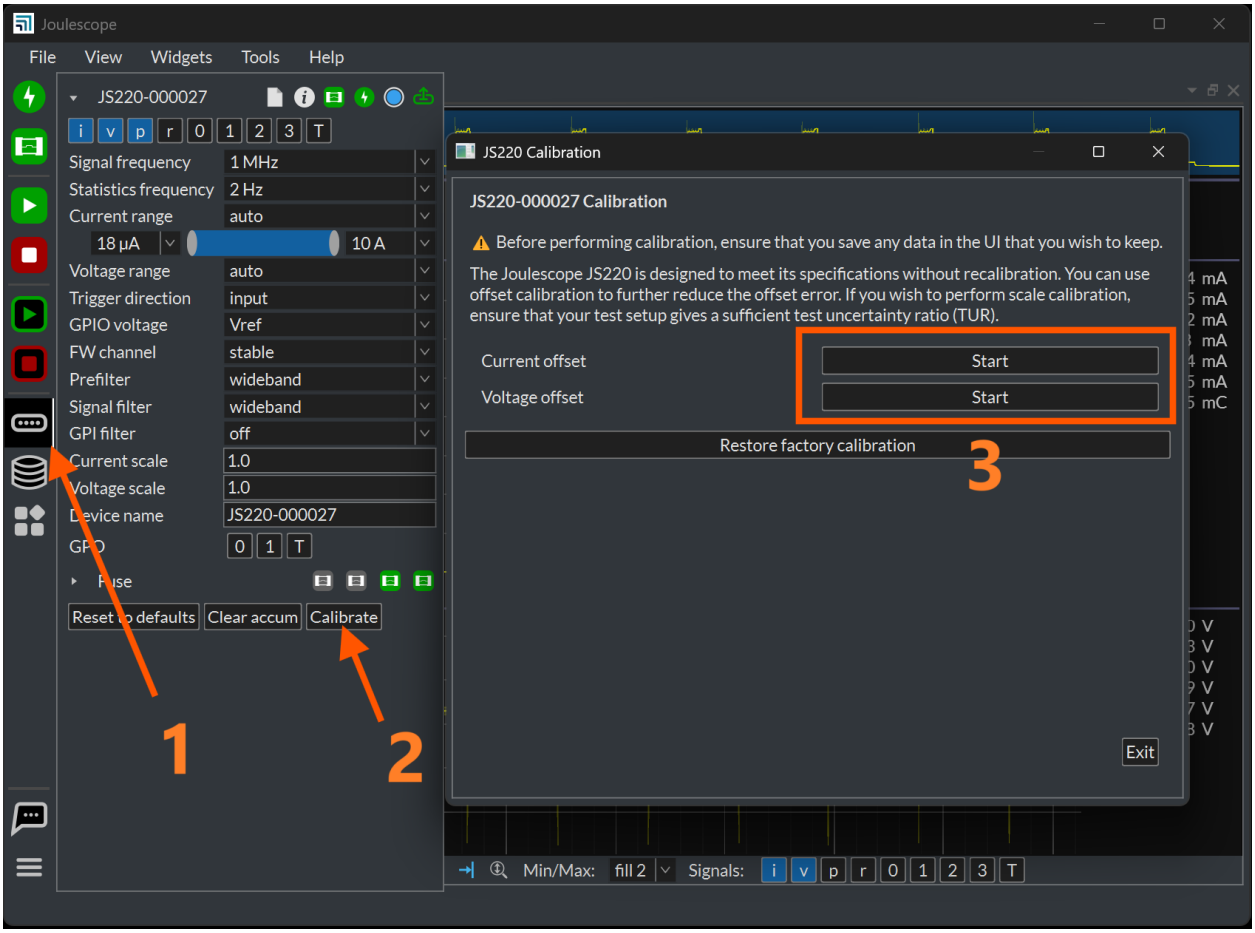

Press **Start** for **Current offset** or **Voltage offset**, and follow the onscreen instructions. Ensure that you leave the terminals open for **Current offset** calibration. Short V-, V+ and I+ to perform **Voltage offset** calibration.

The JS320 uses an internal fixed-point representation of 5Q31 for current samples. 2^{-31} represents an accuracy of ±0.5 nA. After performing trim calibration, the instrument offset may be off by up ±0.25 nA.

CHAPTER

FIFTEEN

ORDERING INFORMATION

The JS320 comes in two variants:

Part Number	Description
JS320-K000	A Joulescope JS320 with standard factory calibration
JS320-K001	A Joulescope JS320 with standard factory calibration and an additional ISO 17025:2017 calibration. Printed paper certificate included.

CHAPTER

SIXTEEN

COMPLIANCE

For additional compliance information, see

https://www.joulescope.com/compliance/JS320[11]

16.1 United States

16.1.1 FCC Compliance Statement

This device complies with part 15 of the FCC Rules. Operation is subject to the following two conditions: (1) This device may not cause harmful interference, and (2) this device must accept any interference received, including interference that may cause undesired operation.

16.1.2 FCC Notice

This equipment has been tested and found to comply with the limits for a Class B digital device, pursuant to part 15 of the FCC Rules. These limits are designed to provide reasonable protection against harmful interference in a residential installation. This equipment generates, uses and can radiate radio frequency energy and, if not installed and used in accordance with the instructions, may cause harmful interference to radio communications. However, there is no guarantee that interference will not occur in a particular installation. If this equipment does cause harmful interference to radio or television reception, which can be determined by turning the equipment off and on, the user is encouraged to try to correct the interference by one or more of the following measures:

- Reorient or relocate the receiving antenna.
- Increase the separation between the equipment and receiver.
- Connect the equipment into an outlet on a circuit different from that to which the receiver is connected.
- Consult the dealer or an experienced radio/TV technician for help.

Changes or modifications not expressly approved by the party responsible for compliance could void the user's authority to operate the equipment.

[11] https://www.joulescope.com/compliance/js220

16.2 Canada

CAN ICES-3 (B)/NMB-3(B)

16.3 Europe

Jetperch LLC declares that this device complies with the essential requirements and other relevant provisions of Directive 2004/108/EC.

In accordance with the European Waste Electrical and Electronic Equipment Directive (WEEE), this device needs to be recycled in accordance with local regulations.

16.4 Safety

Joulescope is an Extra-Low Voltage device as per IEC 60038. Joulescope is intended for INDOOR USE only.

16.5 RoHS Directive 2011/65/EU, 2015/863/EU

This product is CE marked and complies with the European Union's Directive 2011/65/EU OF THE EUROPEAN PARLIAMENT AND OF THE COUNCIL of 8 June 2011 on the restriction of the use of certain hazardous substances in electrical and electronic equipment.

EU Directive 2015/863 of 31 March 2015 amends Annex II to Directive 2011/65/EU of the European Parliament and of the Council as regards the list of restricted substances.

16.6 Country of origin

United States of America

Assembled in Maryland, USA.

Contains foreign and domestic components.

CHAPTER

SEVENTEEN

WARRANTY

The Joulescope JS320 is warranted to be free from defects in materials and workmanship for a period of one year from the date of purchase. If your Joulescope becomes inoperative from such a defect within the warranty period, Jetperch will either repair or replace your unit, at Jetperch's discretion.

This warranty covers normal use. The warranty does not cover damage that occurs during shipment. The warranty does not cover damage from improper use, misuse, abuse, tampering, alteration, accident, software hacking, or recalibration other than by an authorized recalibration provider.

Jetperch LLC makes no other representations or warranties, express or implied, of any kind including, but not limited to, any implied warranty of merchantability or fitness for a particular purpose. Jetperch shall not be liable for loss of use of Joulescope. Jetperch will not be liable for any other incidental or consequential damages, expenses, or financial losses, nor will Jetperch be liable for claims of such damages.

To submit a warranty claim, contact support@jetperch.com. You will need to provide your name, address, phone number, and email. You will also need to provide proof of purchase, such as a purchase receipt, that contains the original date of sale.

CHAPTER

EIGHTEEN

INTELLECTUAL PROPERTY

This product is protected by the following patents:

U.S. Patent Number 11,249,117

U.S. Patent Number 11,774,469

Additional U.S. Patents Pending

Joulescope is a registered US trademark of Jetperch LLC.

CHAPTER

NINETEEN

CHANGE LOG

Revision	Date	Description
2.0	2026 October 26	Moved to https://docs.joulescope.com, with web, Markdown and PDF editions built from one source. Specification tables are generated from the datasheet values, also published as YAML. The glossary, contact information and disclaimers are shared by all guides. Supported operating systems and Python versions are listed once, in Getting Started.
1.3	2026 June 25	Increased voltage offset spec in 2V range from ±67 µV to ±200 µV.
1.2	2026 June 8	Added voltage common mode voltage statement and CMRR spec
1.1	2026 May 26	Added typical resolution tables
1.0	2026 May 21	Initial release

APPENDIX

A

GLOSSARY

Accuracy
The average variation in the bias between measurements and truth. Good measurements are both accurate and precise.

Ammeter
A device that measures electrical current.

Burden Voltage
The voltage drop that occurs through the test equipment device. For shunt ammeters, the burden voltage includes the voltage across the shunt resistor, connectors, fuses, and any additional resistance in the device.

Current
The flow of electric charge per time from positive voltage to negative voltage, measured in amperes (A), often called amps. One amp is one coulomb of charge flowing per second. One coulomb is approximately 6.242×10^{18} electrons, but electric current is defined opposite to the electron flow.

Energy
The total power exerted over time, measured in joules (J). Energy is the time integral of power.

Insertion Loss
The loss in signal power due to a device in the signal path, most commonly used in reference to radio frequency (RF) or telecommunications. See **Burden Voltage**.

Multimeter
A multifunction device that usually incorporates a voltmeter and shunt ammeter, at a minimum. A standard multimeter supports only one measurement quantity at a time.

Ohm's Law
The equation that relates voltage, current and resistance: $V = I * R$

Oscilloscope
A device that graphically displays one or more signals, usually voltages, varying over time as a two-dimensional plot with time on the x-axis and the signal on the y-axis.

Power
The time-rate of doing work, measured in watts (W). Power is voltage multiplied by current.

Precision
The amount of variation between measurements of the same value relative to each other. Good measurements are both accurate and precise.

Resistance
The quantity of opposition to the flow of electric current.

Shunt Ammeter
An ammeter that measures the voltage across a resistor, and then uses Ohm's Law to compute current.

Shunt Resistor
The resistor used by "Shunt Ammeters" to detect current using Ohm's Law: I = V / R. Given a known R and a measured V, the ammeter computes I.

Universal Serial Bus (USB)
The now ubiquitous standard for connecting computers and peripherals. Joulescope connects to the host computer using USB 2.0 high-speed operating at 480 Mbps.

Voltage
The electric potential difference, measured in volts (V).

Voltmeter
A device that measures electrical voltage.

APPENDIX

B

CONTACT

To purchase a Joulescope product, visit:
https://www.joulescope.com

To submit a warranty claim, first review the warranty in your instrument's user's guide: *JS320*, JS220, or JS110.
You can submit warranty claims to:
support@joulescope.com

If you have questions regarding operation of Joulescope, search the website at:
https://www.joulescope.com/

And visit the forum:
https://forum.joulescope.com/

For compliance information, see:

- JS320: https://www.joulescope.com/compliance/JS320
- JS220: https://www.joulescope.com/compliance/js220
- JS110: https://www.joulescope.com/compliance/JS110

If you wish to contact Jetperch regarding the operation of your Joulescope, contact us through email at:
support@joulescope.com

EU Responsible Person for GPSR Compliance

Marco Wünschmann
Welectron
Haid-und-Neu-Str. 7
76131 Karlsruhe
Germany
Phone: +49 721 909819-90
Fax: +49 721 781570-27
E-Mail: info@welectron.com

Location

Jetperch LLC
402 King Farm Blvd
Ste 125 # 1065
Rockville, MD 20850
USA

APPENDIX

C

DISCLAIMERS

These notices apply to the Joulescope user's guides and datasheets on this site. The software documentation under software/index is published under each project's own license.

C.1 Copyright notice

© 2019-2026 Jetperch LLC

All material in the Joulescope user's guides and datasheets, including the text, images, design, and logos, are owned by Jetperch LLC, either through copyright or trademark, unless otherwise indicated. No part of these user's guides and datasheets may be reproduced in any form or by any means without prior written consent from Jetperch LLC as governed by the United States and international copyright laws.

C.2 Publisher

Jetperch LLC
402 King Farm Blvd
Ste 125 # 1065
Rockville, MD 20850
USA

C.3 Documentation warranty

The Joulescope user's guides and datasheets are provided AS-IS with no other representations or warranties, expressed or implied, of any kind including, but not limited to, any implied warranty of merchantability or fitness for a particular purpose. Jetperch LLC does make reasonable efforts to present accurate and reliable information in the Joulescope user's guides and datasheets.

The information in the user's guides and datasheets is subject to change. The most up-to-date version can be retrieved from https://docs.joulescope.com/.

Each user's guide lists its revisions in its change log.